ANT1_LB2+N77_2

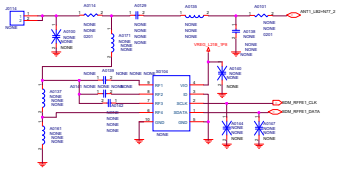

ANT3_MHB1

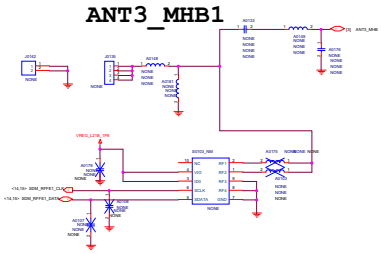

ANT2_LB3+MHB4

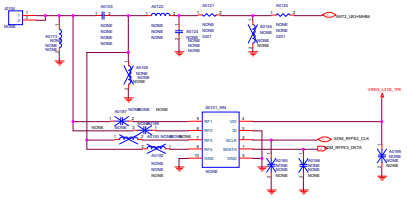

ANT6_N77_1

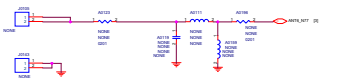

ANT5_MHB3

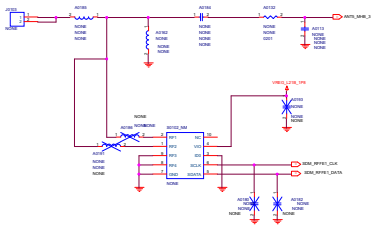

ANT7_N77_3

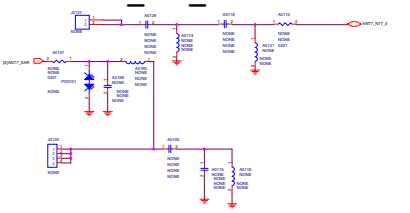

MAIN PCB GND

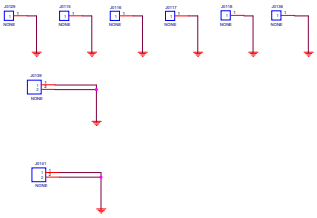

SAR Sensor

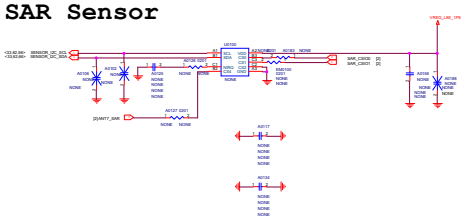

ANT9_B32

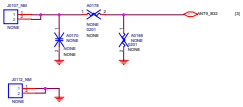

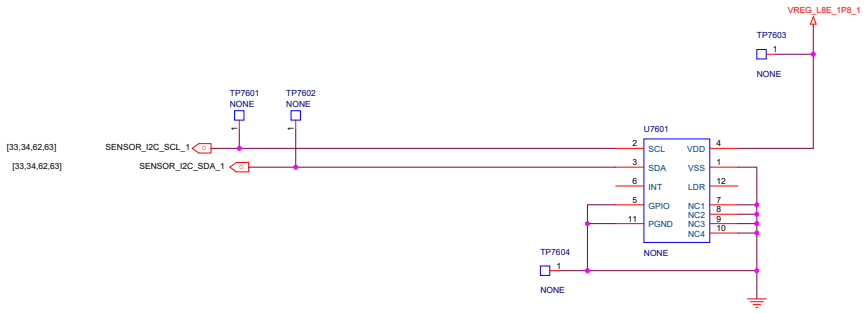

Title	<Title>	
Size A3	Document Number <Doc>	
Date: Wednesday, August 16, 2023	Sheet	

ANT10_GPSL1+B32+WIFI2.4G

ANT11_WIFI_5G

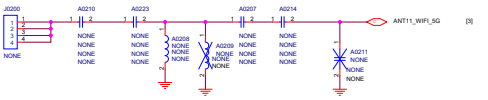

ANT12_WIFI_5G

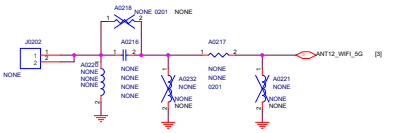

ANT8_WIFI_2.4G+N77

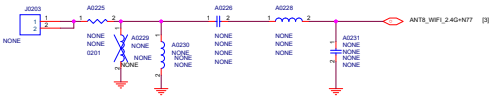

Title	MAIN
Size A2	Document Number <Doc>
Date: Wednesday, August 16, 2023	Sheet 2 of 81

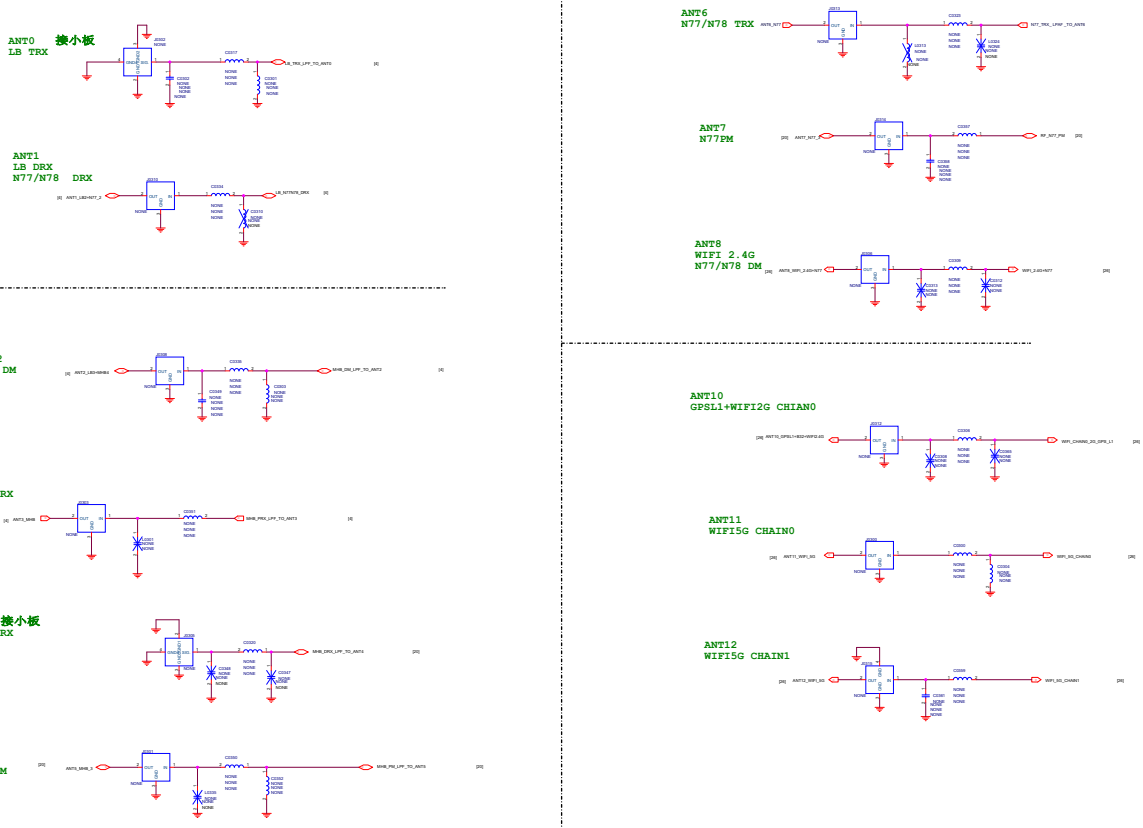

Project	MAIN
Title	Schematic Design
Date	Wednesday, May 15, 2024

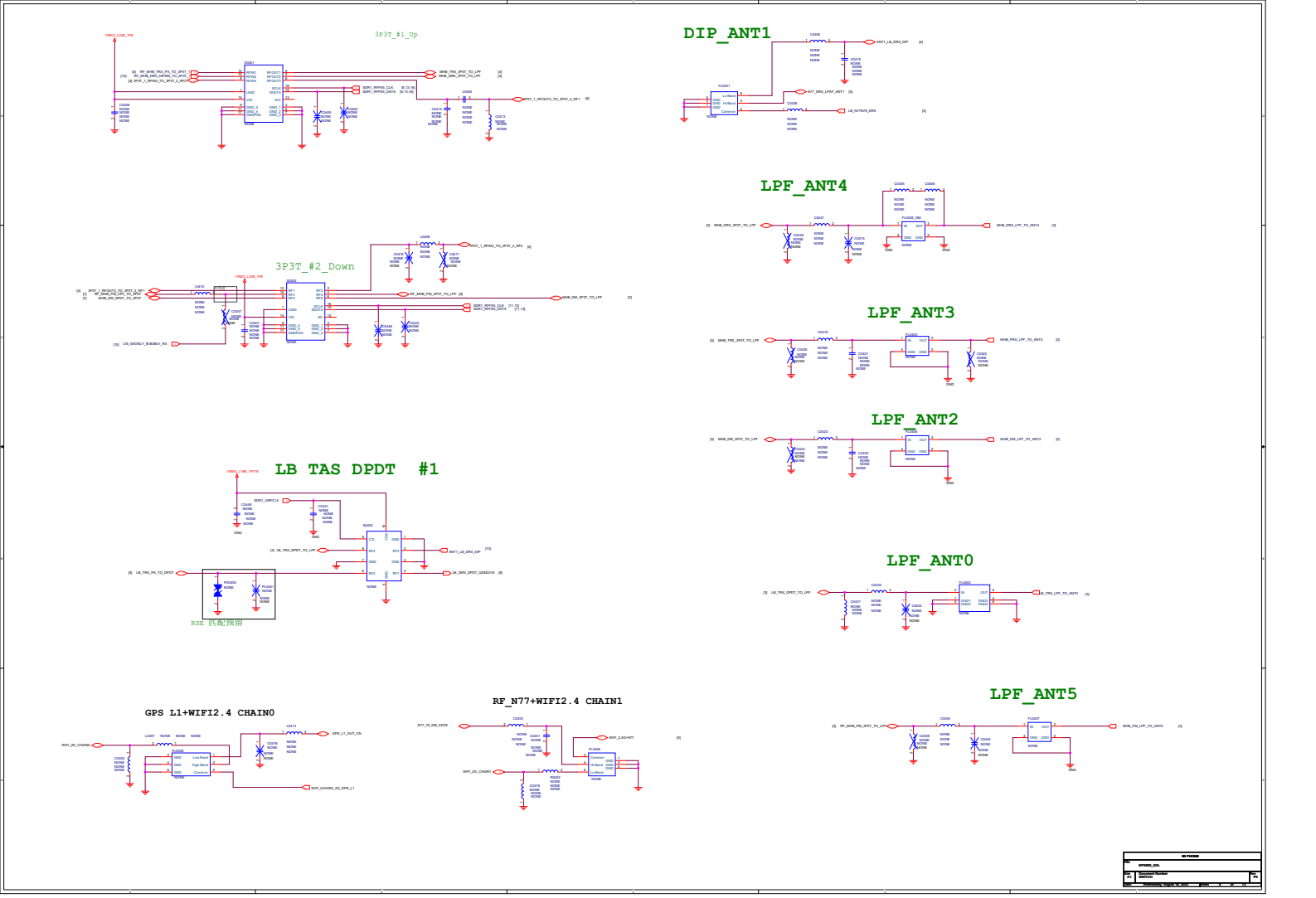
3P3T_#1_Up
DIP_ANT1
LPF_ANT4
3P3T_#2_Down
LPF_ANT3
LPF_ANT2
LB TAS DPDT #1
LPF_ANT0
GPS L1+WIFI2.4 CHAIN0
RF_N77+WIFI2.4 CHAIN1
LPF_ANT5

DiFEM QDM2316

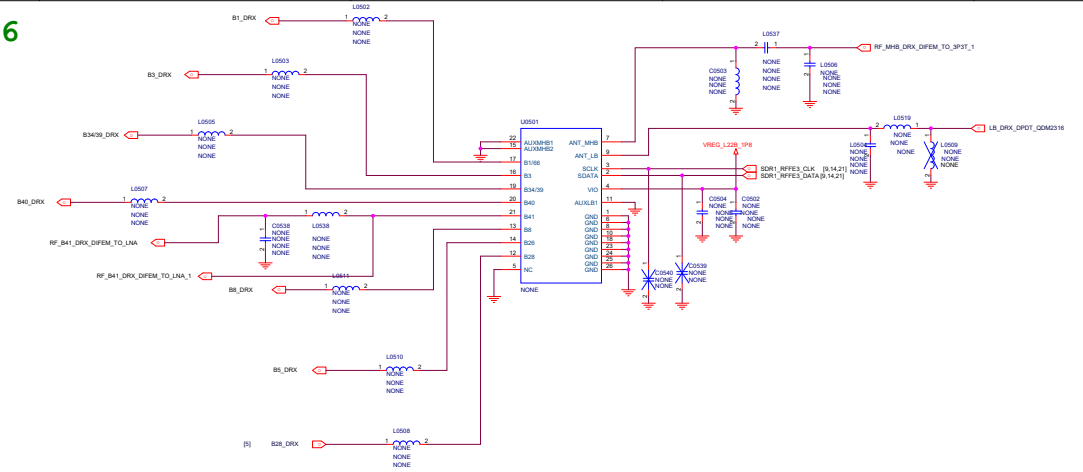

B41 LNA 供不平衡用

MXD8921 #1

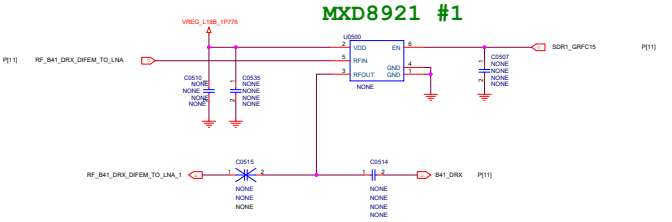

File:	MAIN
Size: A2	Document Number: DRX
Date: Wednesday, August 16, 2023	Sheet

CN_GLB_QM77042

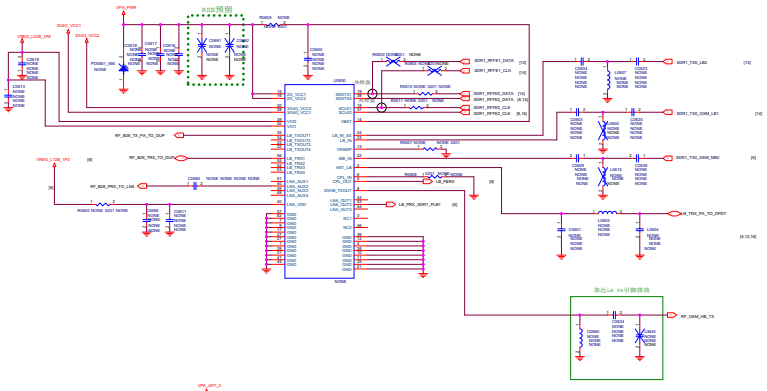

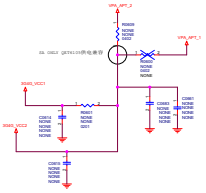

CN_B28_DUP

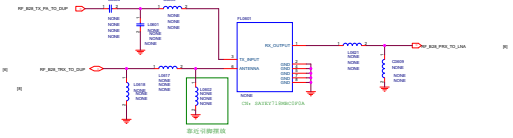

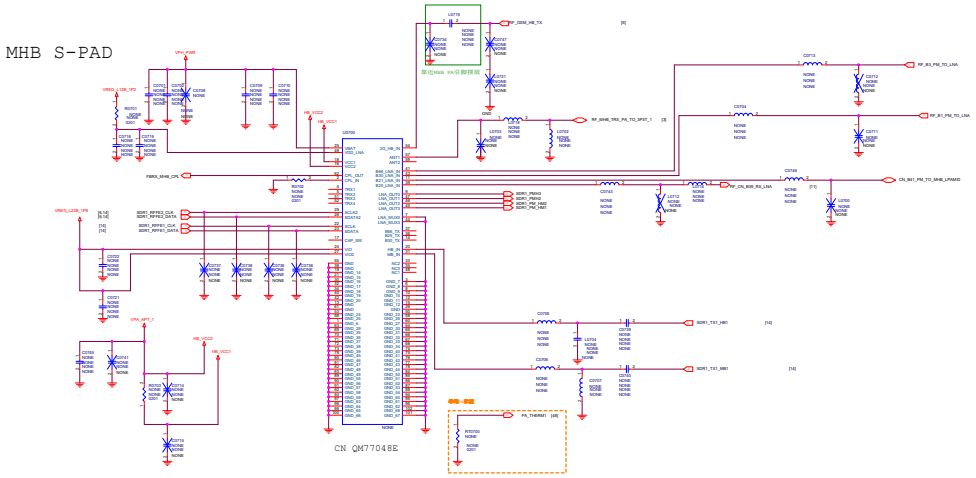

Title	
Size	Document Number
A3	MHB PA
Date:	Sheet of

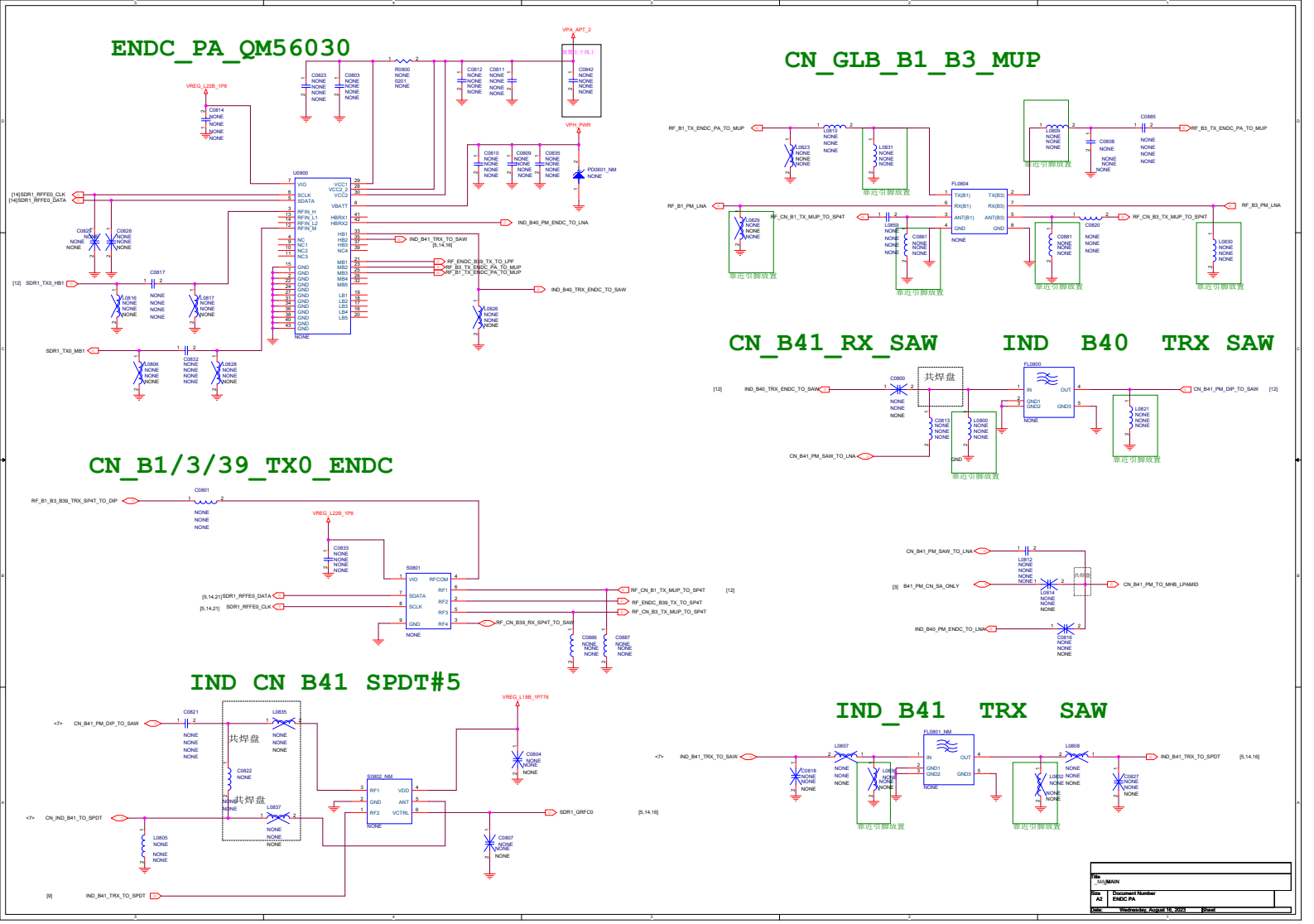
ENDC_PA_QM56030
CN_GLB_B1_B3_MUP
CN_B41_RX_SAW
IND B40 TRX SAW
CN_B1/3/39_TX0_ENDC
IND CN B41 SPDT#5
IND_B41 TRX SAW
共焊盘
靠近引脚放置
File
MAIN
Size
A2
Document Number
ENDC PA
Date:
Wednesday, August 18, 2003
Sheet

5G QET

QET6105

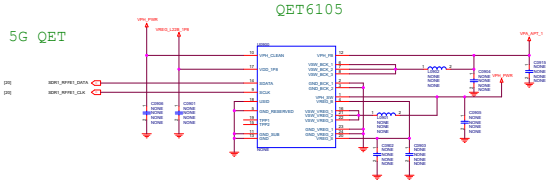

4G QET

QET4101

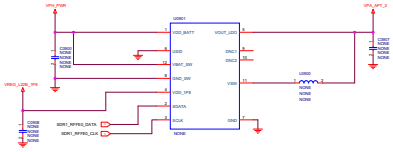

Title	PCI/MCI/BCI/V1
Size	Document Number
A0	RF DC-DC
Date:	Wednesday, August 16, 2023

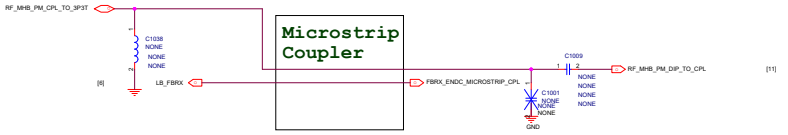

锚点 ENDC Diplexer

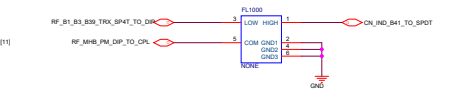

B1_B3_B41_CN SA ONLY TRX SAW

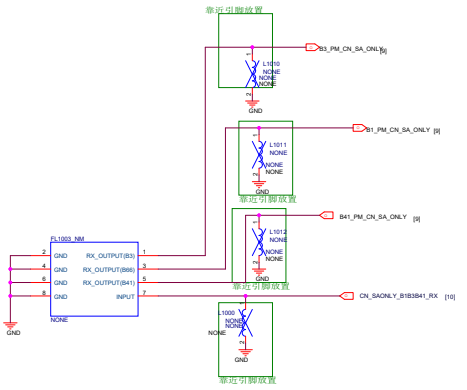

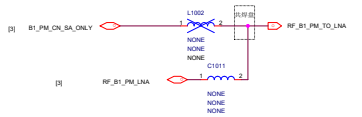

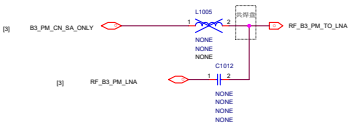

LC_B39 TX LPF

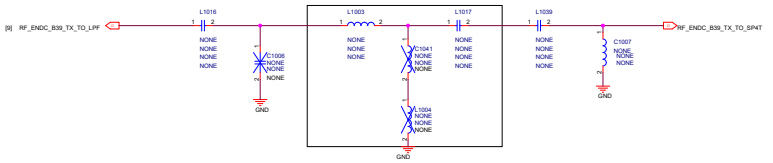

B39 RX SAW

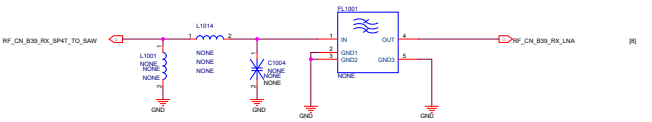

Title	_MAIN\MAIN
Size A2	Document Number PRX.MIMO
Date: Wednesday, August 16, 2023	Sheet

CN_B41_DM_SAW

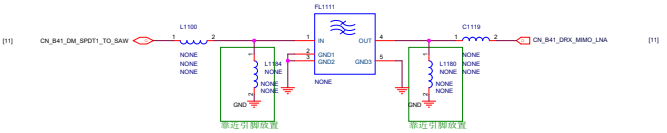

B1_B3_DRX MIMO

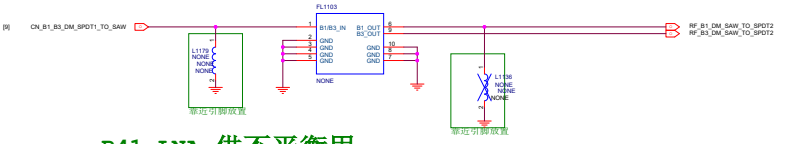

B41 LNA 供不平衡用

MXD8921 #3

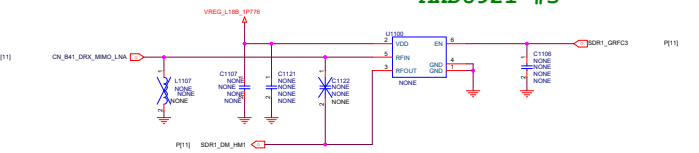

SPDT#2

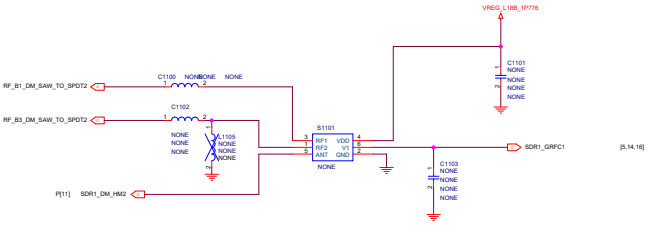

CN_LMB+HB_SPDT#1

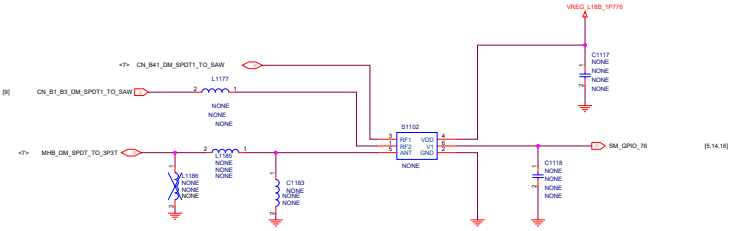

Title	_MAIN
Size A2	Document Number DRX_MIMO
Date: Wednesday, August 16, 2023	Sheet

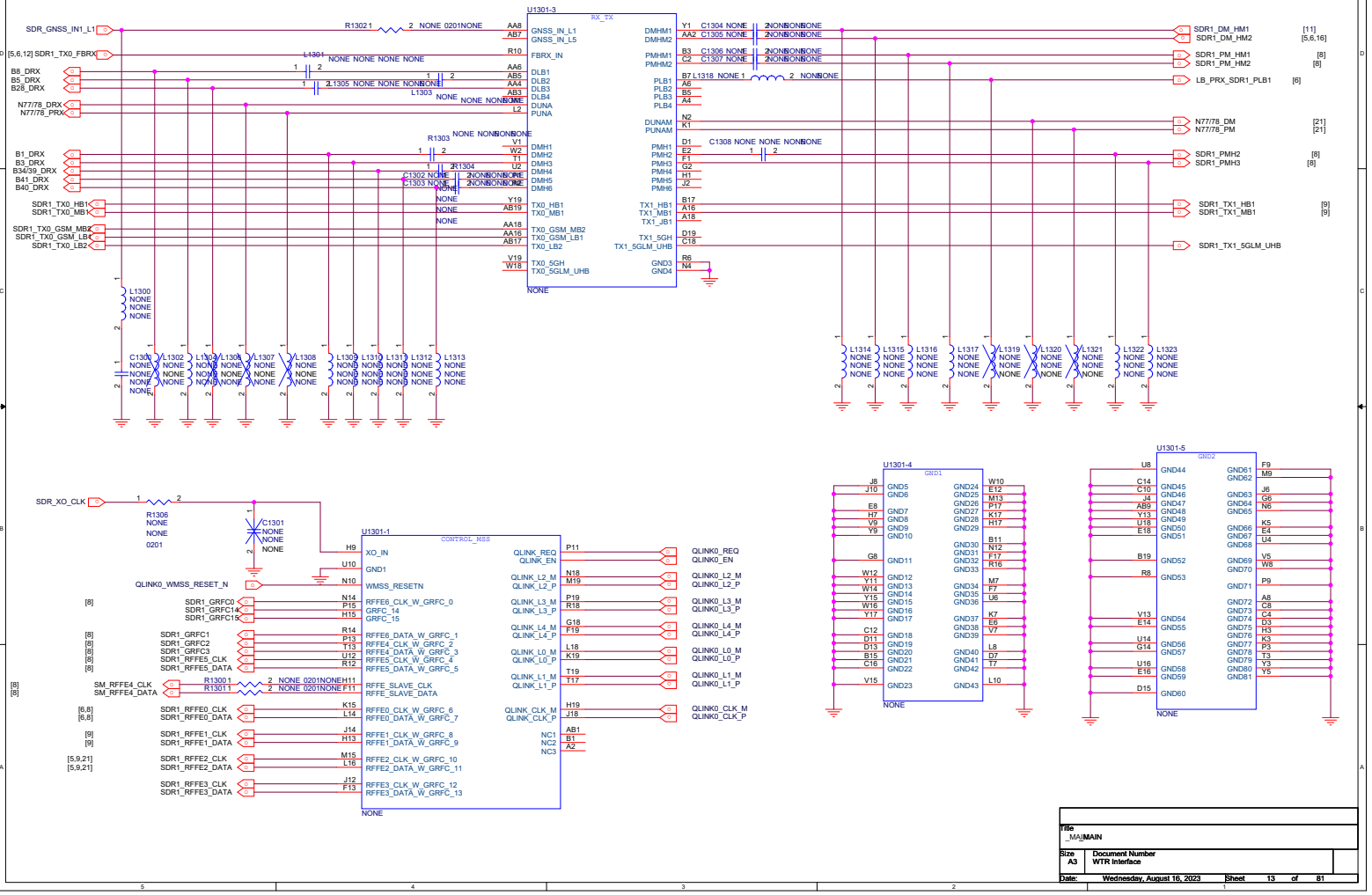

Title	_MAIN\MAIN
Size A3	Document Number WTR Interface
Date: Wednesday, August 16, 2023	Sheet 13 of 81

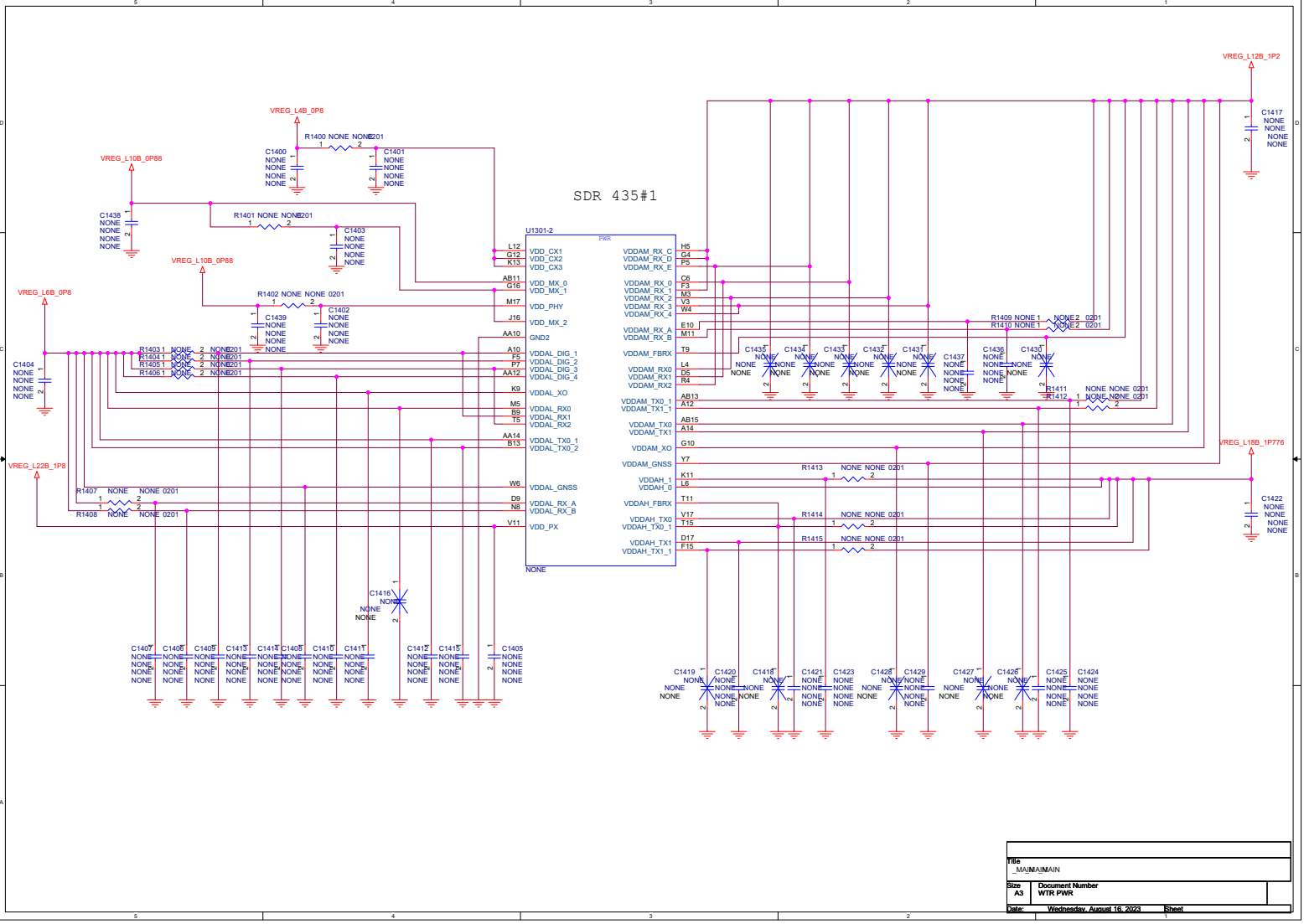

Title
_MAIN

Size	Document Number
A3	WTR PWR

Date: Wednesday, August 16, 2023 Sheet

SUB 6G TRX MODULE

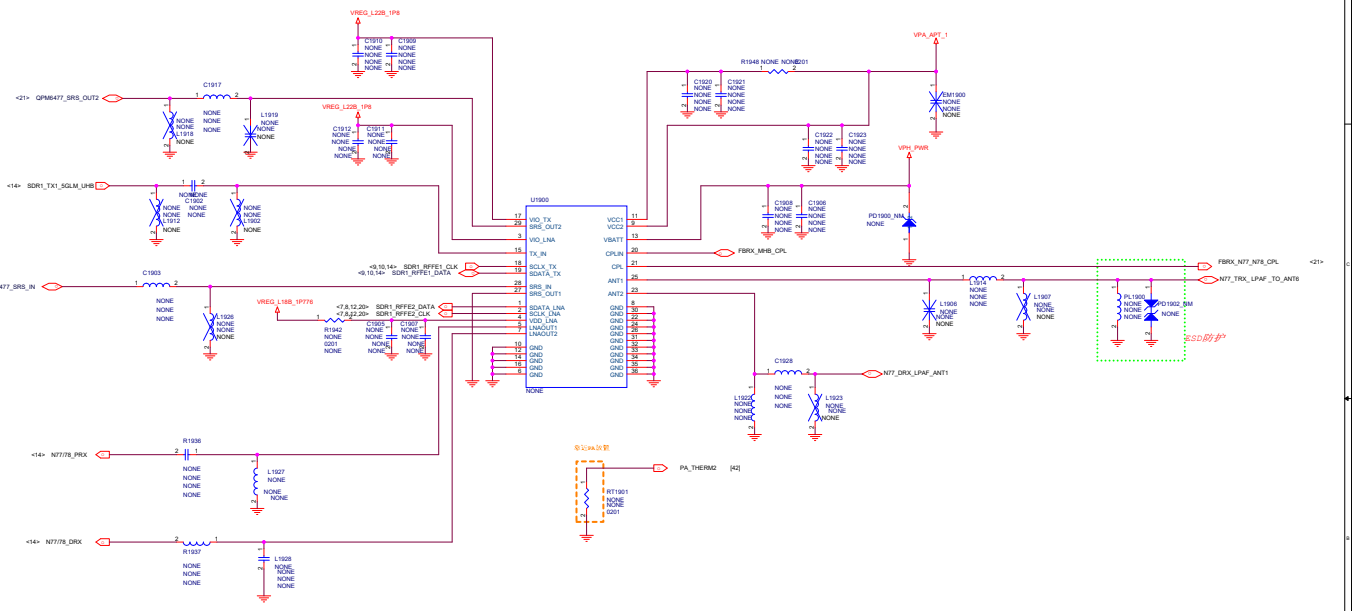

Title	M16T_MAIN
Size A2	Document Number 5G N77 N79
Date: Wednesday, August 16, 2023	Sheet

SUB 6G DRX MODULE

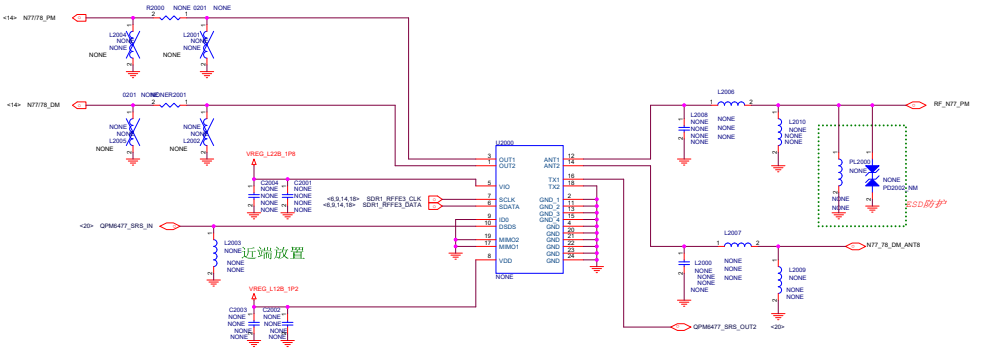

FBRX SPDT

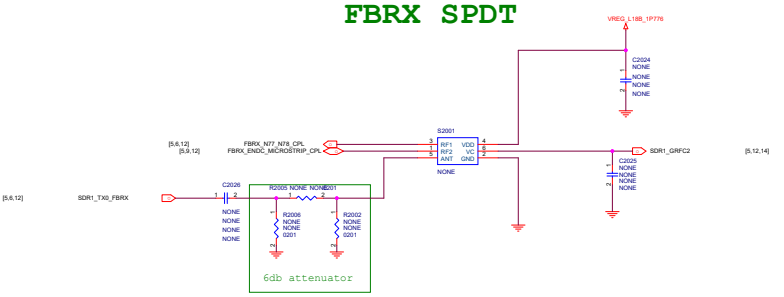

Title	M16T_MAIN
Size A2	Document Number 5G N77 N79 MIMO
Date: Wednesday, August 16, 2023	Sheet

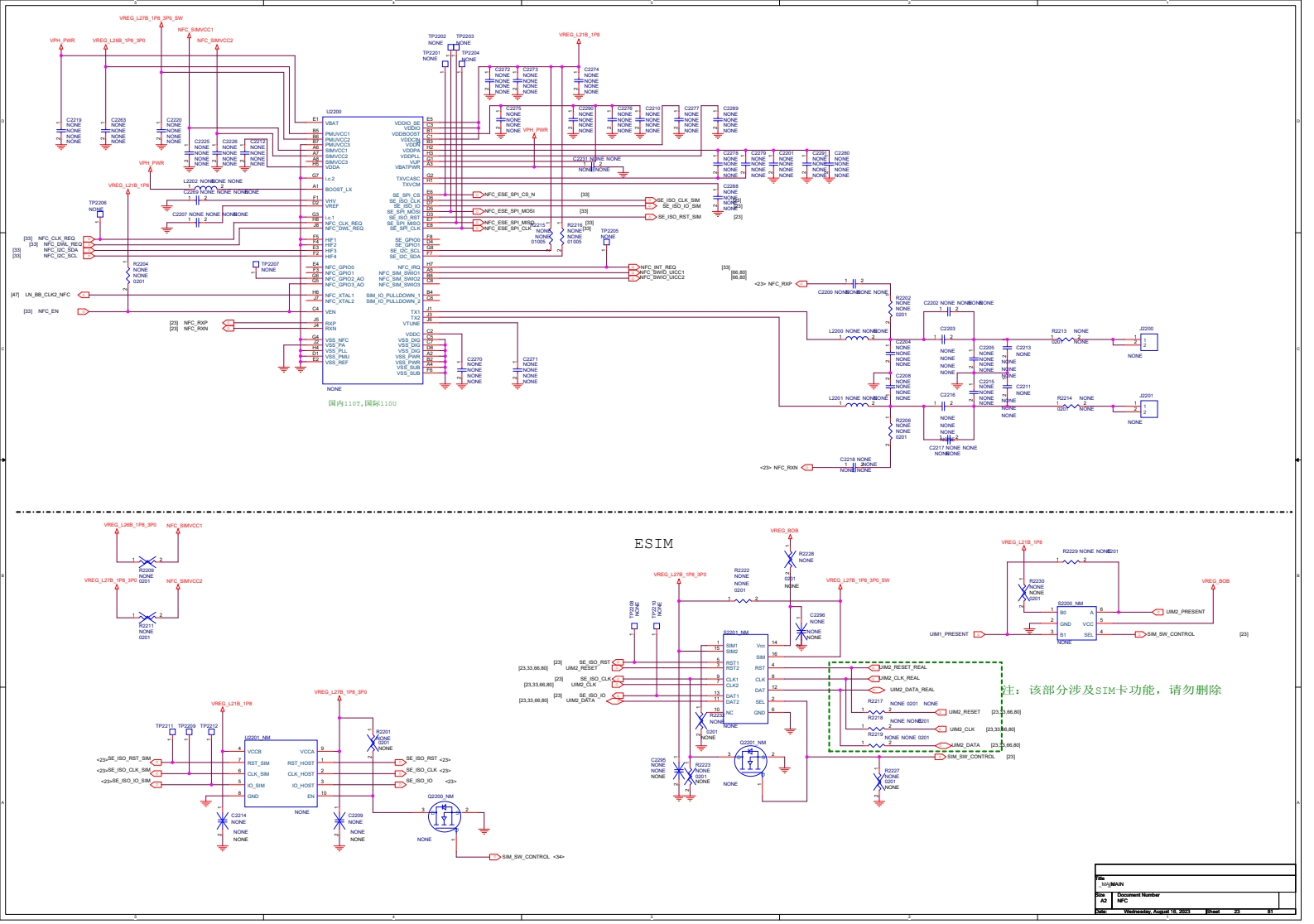

Title	MAIN
Size	A2
Document Number	NFC
Date:	Wednesday, August 16, 2023
Sheet	23 of 81

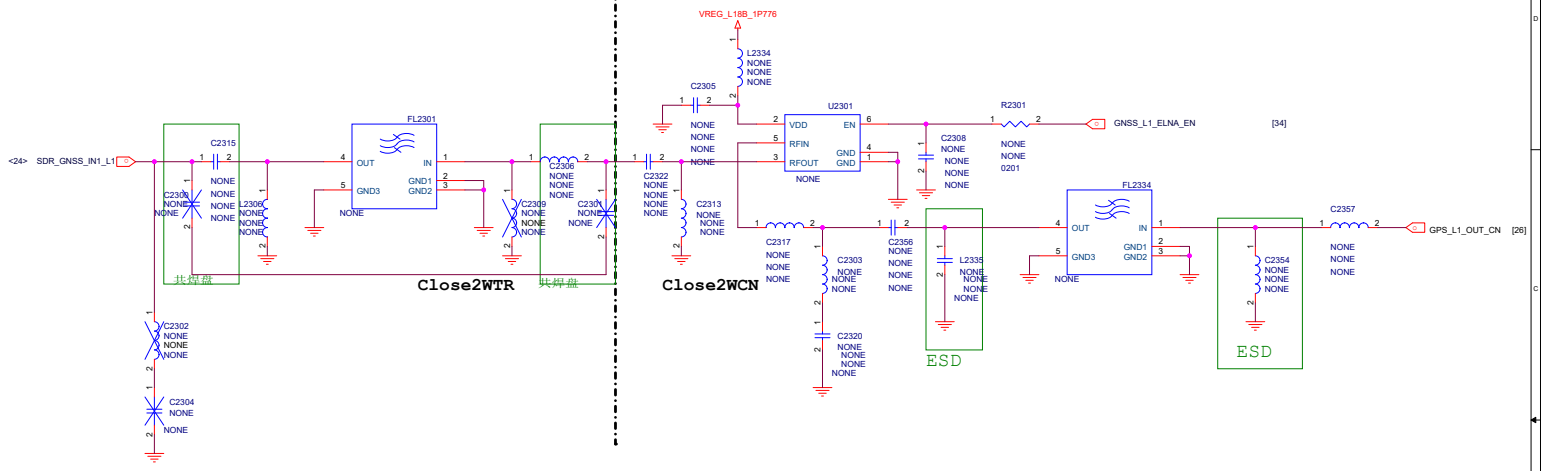

Title	_MAIMAIMAIN
Size A3	Document Number GPS
Date: Wednesday, August 16, 2023	Sheet 24 of 81

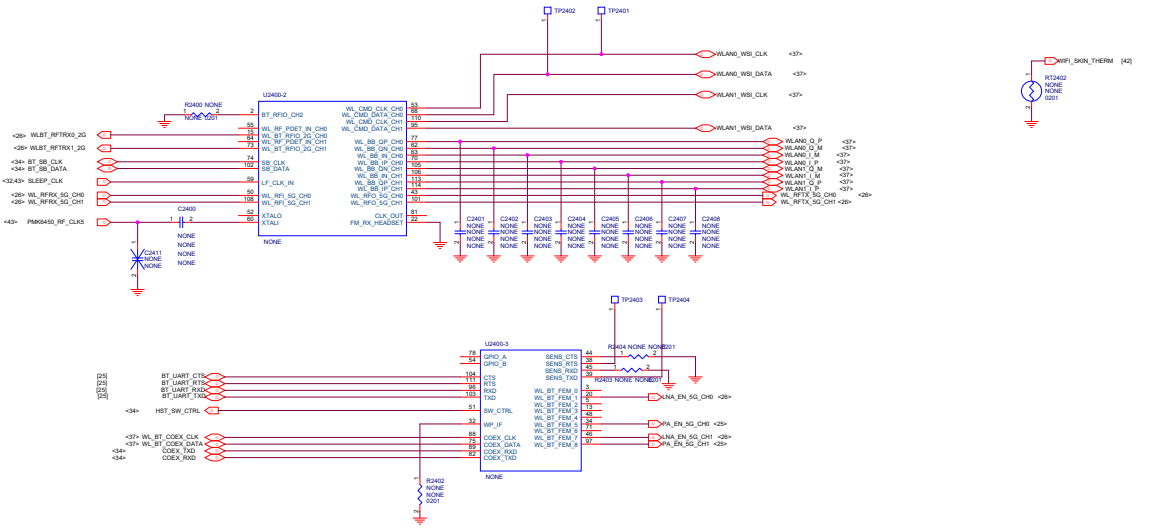

Title	L9/L9B_INT_MAIN
Size A2	Document Number WiFi Interface
Date: Wednesday, August 16, 2023	Sheet 24 of 74

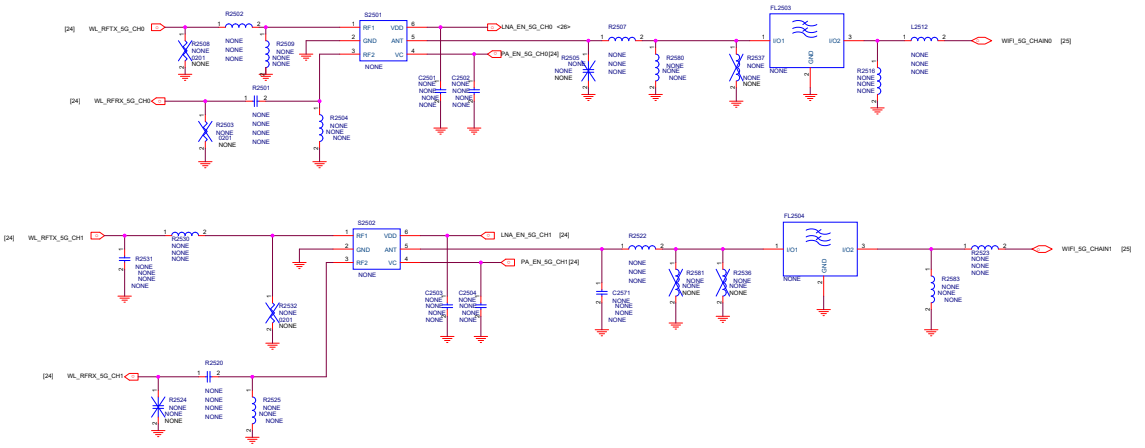

Title	L9/L9B_INT_MAIN
Size A2	Document Number Reserved[addrbadr]
Date: Wednesday, August 16, 2023	Sheet 25 of 74

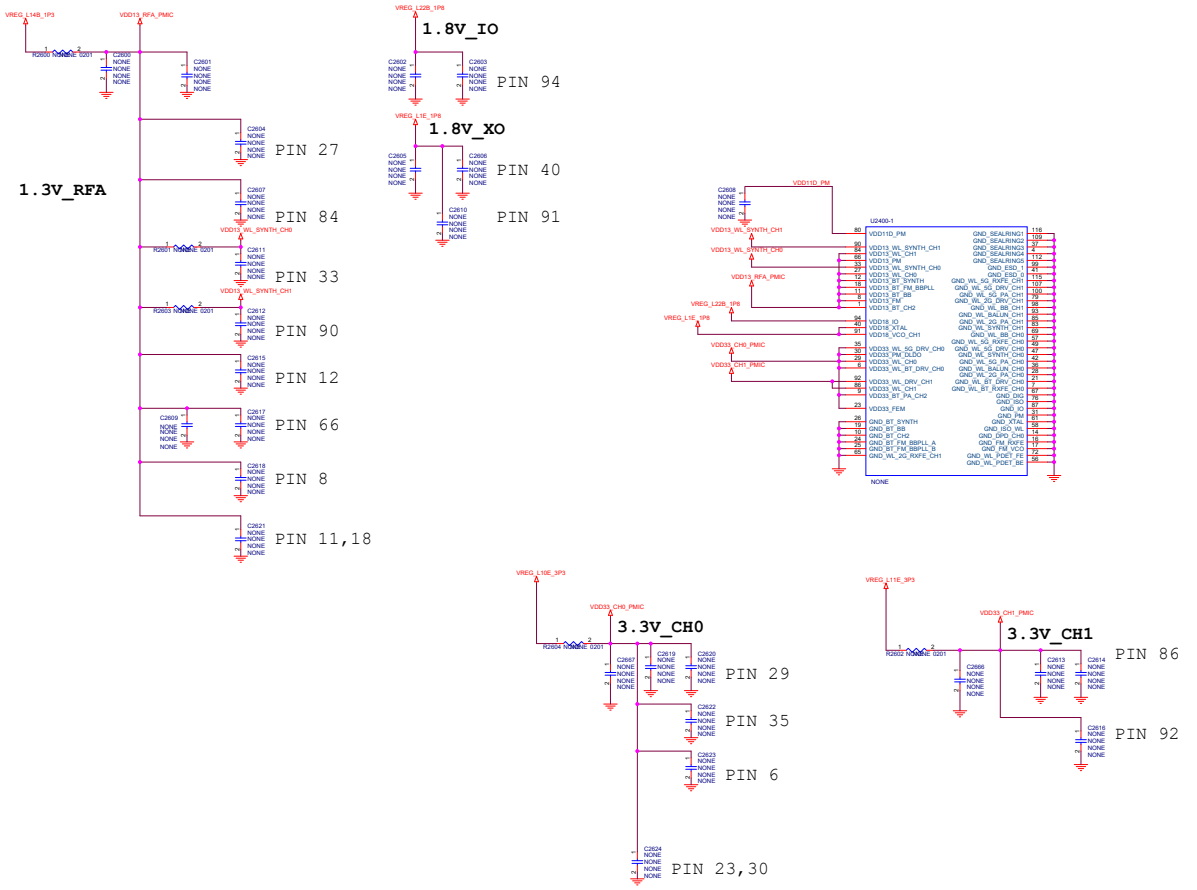

Title: _MAIN
Size: A2
Document Number: WIFI Decoupling
Date: Wednesday, August 16, 2023
Sheet

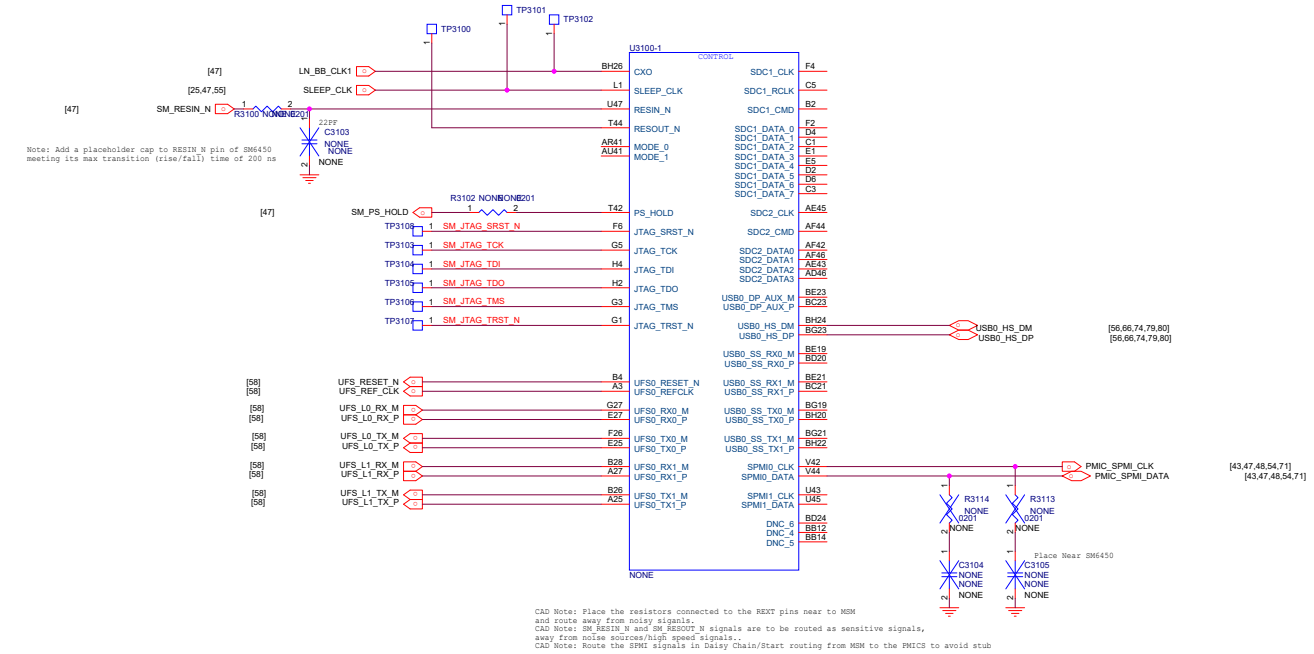

MSM skin temperature thermistor

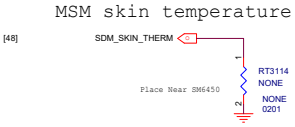

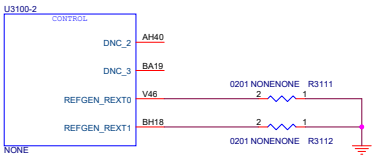

Quiet thermistor Place on a cool place

Title	_MAIN MAIN
Size A3	Document Number SM8350 Control
Date: Wednesday, August 16, 2023	Sheet 32 of 81

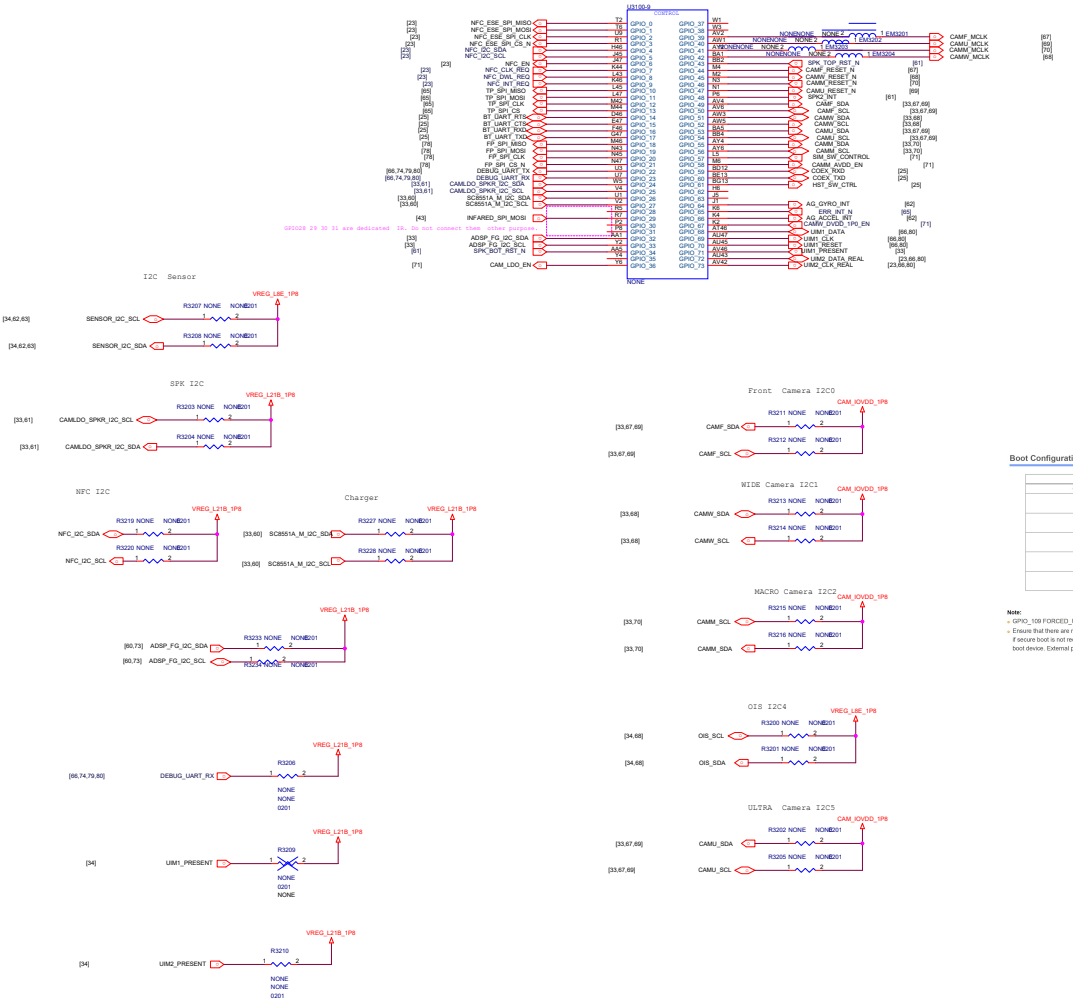

Boot Configuration GPIO Settings

GPIO	Function	Comments
GPIO_109	FORCED_USB_BOOT	Forces a USB boot
GPIO_77	BOOT_CONFIG_0 WDOG_DISABLE	Gates the watchdog expired signal
GPIO_79	BOOT_CONFIG_1 FAST_BOOT[0]	Selects the external boot device
GPIO_81	BOOT_CONFIG_2 FAST_BOOT[1]	Selects the external boot device
GPIO_83	BOOT_CONFIG_3 FAST_BOOT[2]	Selects the external boot device
GPIO_85	BOOT_CONFIG_4 FAST_BOOT[3]	Selects the external boot device

Note:

- GPIO_109 FORCED_USB_BOOT is polarity selectable via GPIO_110 FORCE_USB_BOOT_POLARITY_SEL
- Ensure that there are no external pull-ups on GPIO_86, GPIO_90, GPIO_91, GPIO_94, GPIO_97, GPIO_106, and GPIO_47, if secure boot is not required. The external pull-ups can force the SM6450 device to enter secure boot or to select a different boot device. External pull-up can be used on these GPIOs when fuses are blown.

Qualcomm
Qualcomm Technologies, Inc. and/or its affiliates - Qualcomm Confidential and Proprietary

Title	_MAIN
Size: A2	Document Number: SDM850 GPIO-1
Date: Wednesday, August 16, 2023	

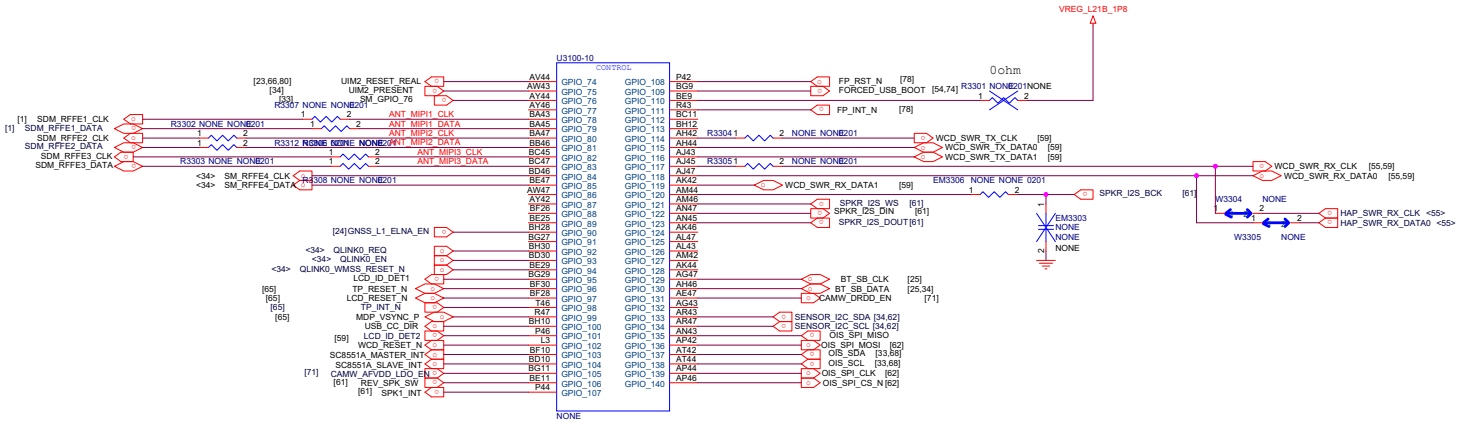

Title	_MAIN\MAIN
Size A3	Document Number SDM855 GPIO-2
Date: Wednesday, August 16, 2023	Sheet 34 81

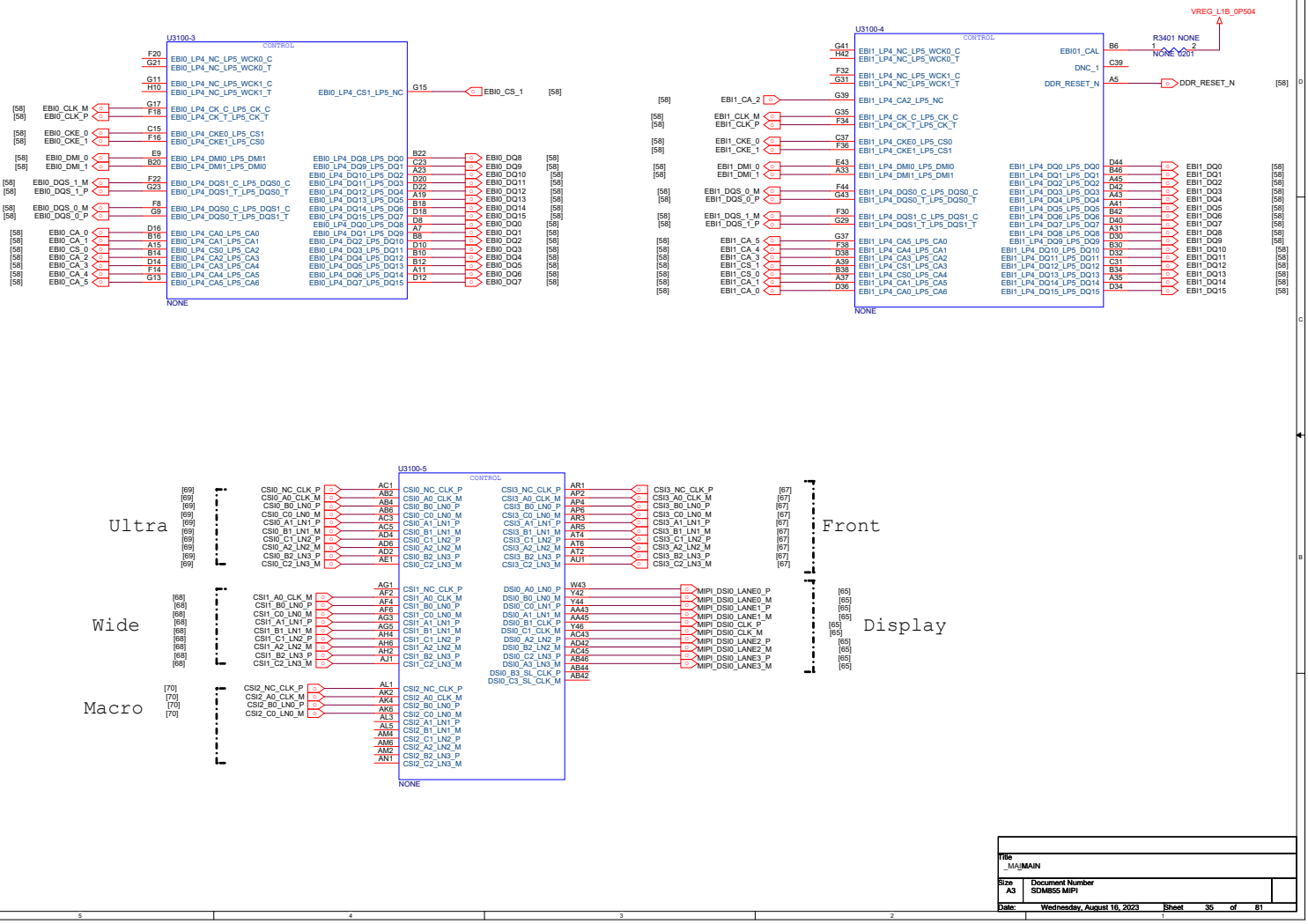

Title	_MAIN MAIN
Size A3	Document Number SDM855 MIPI
Date: Wednesday, August 16, 2023	Sheet 35 of 81

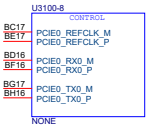

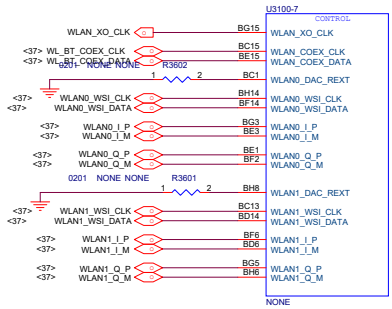

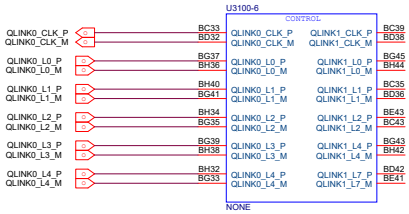

Title	_MAINMAIN
Size A3	Document Number SDM855 RF INTF
Date: Wednesday, August 16, 2023	Sheet 37 of 81

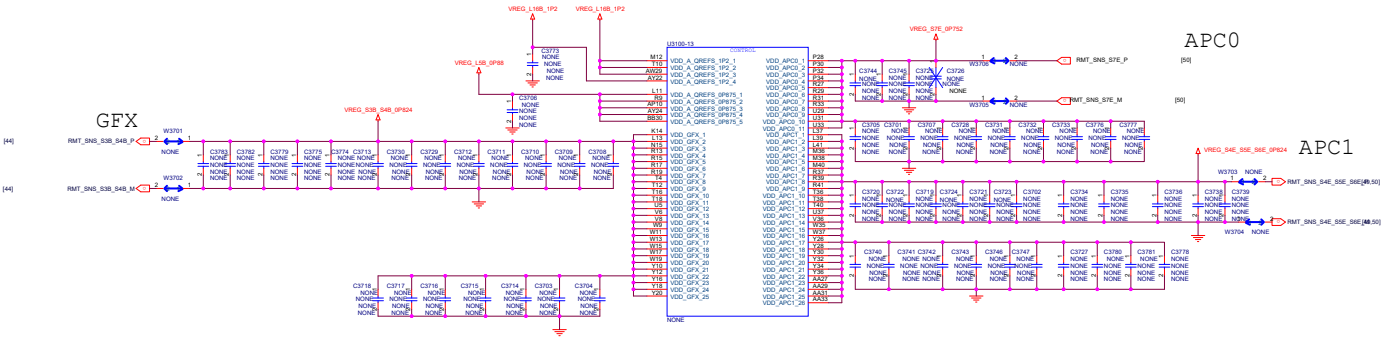

Title	_MAIN\MAIN
Size: A2	Document Number: SDM855 PWR1
Date: Wednesday, August 16, 2023	Sheet 38 of 81

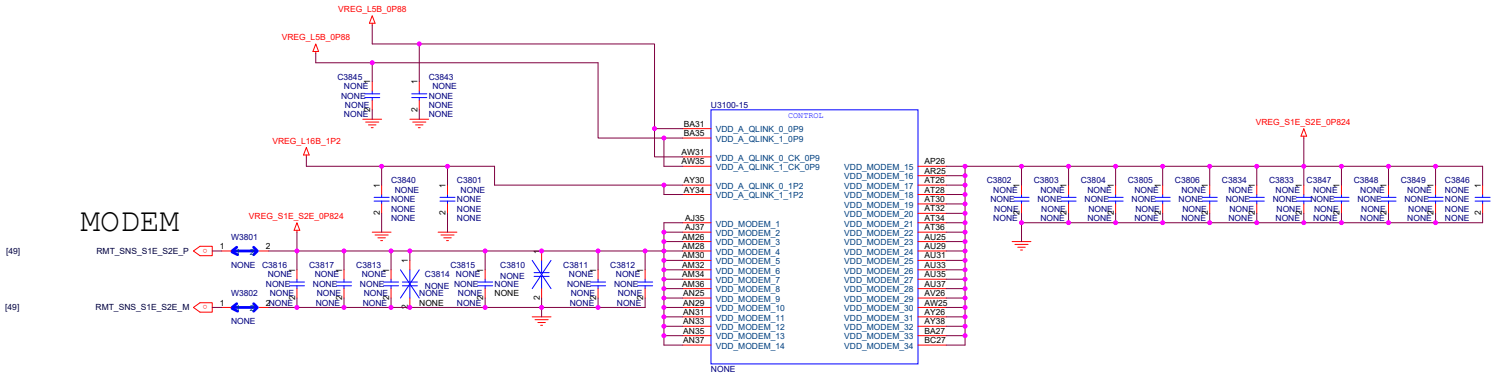

Title	_MAIMAIN
Size A3	Document Number SDM855 PWR2
Date: Wednesday, August 16, 2023	Sheet 39 81

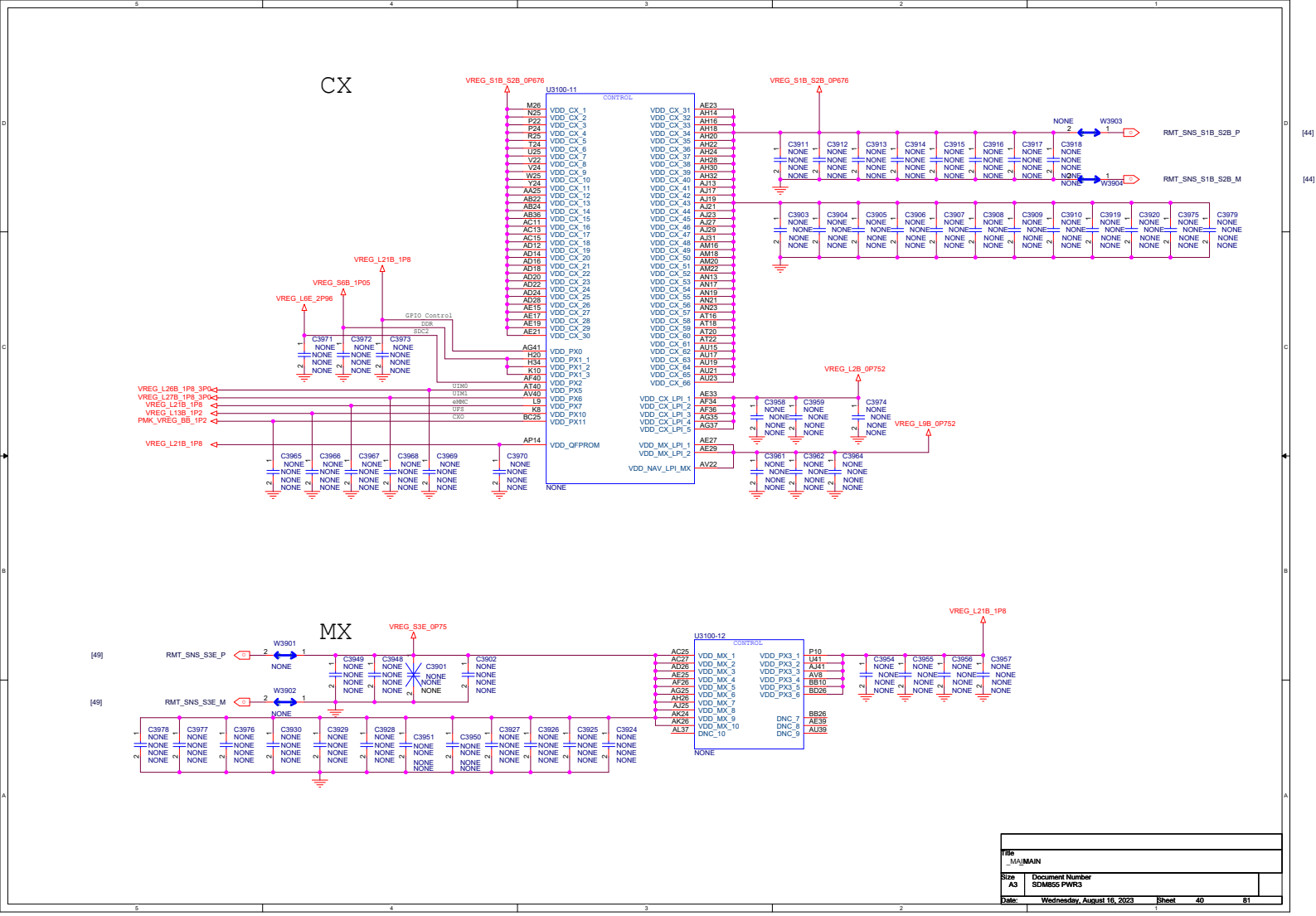

Title	_MAIMAIN
Size A3	Document Number SDM855 PWR3
Date: Wednesday, August 16, 2023	Sheet 40 81

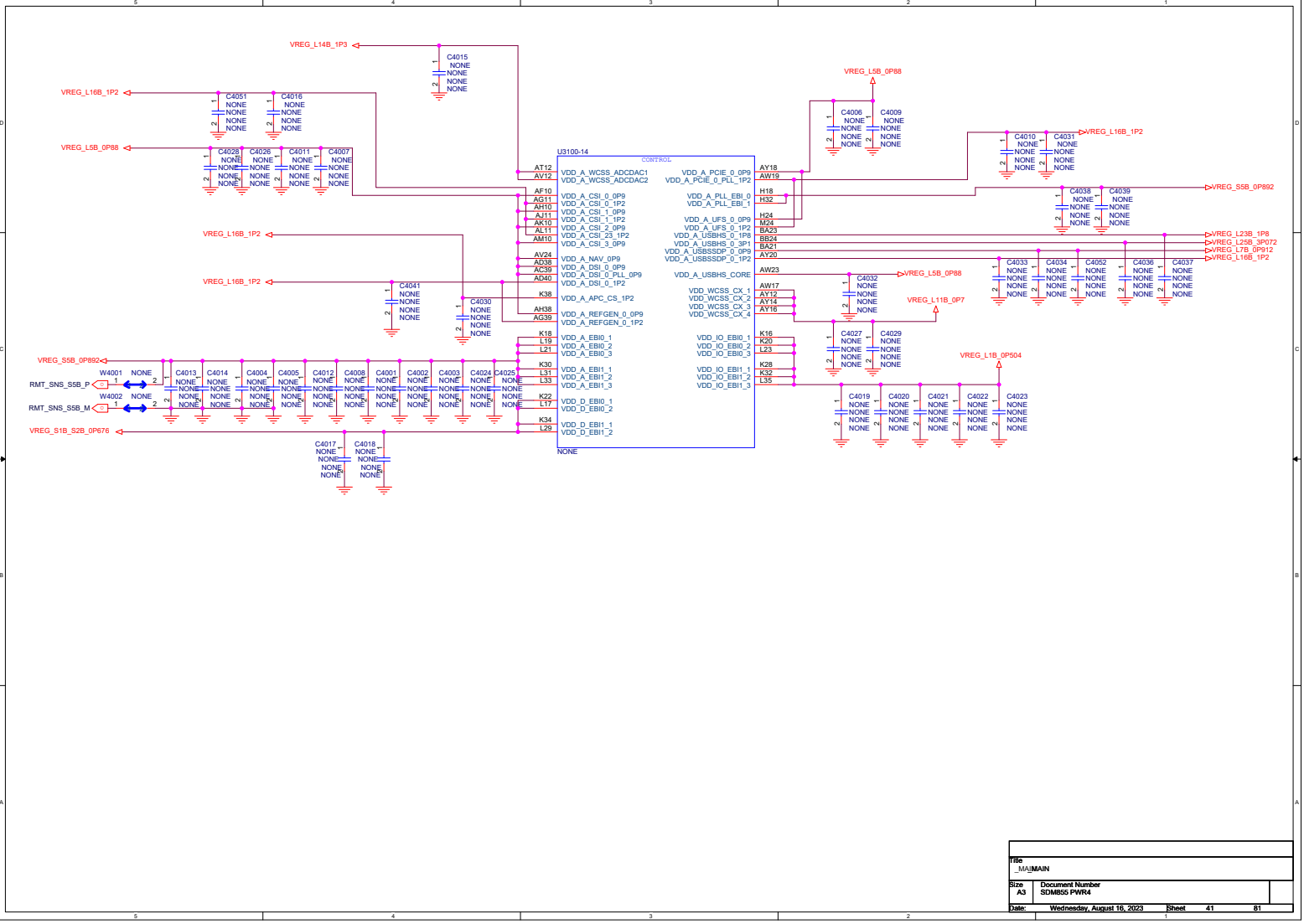

Title	_MAIMAIN
Size A3	Document Number SDM855 PWR4
Date: Wednesday, August 16, 2023	Sheet 41 81

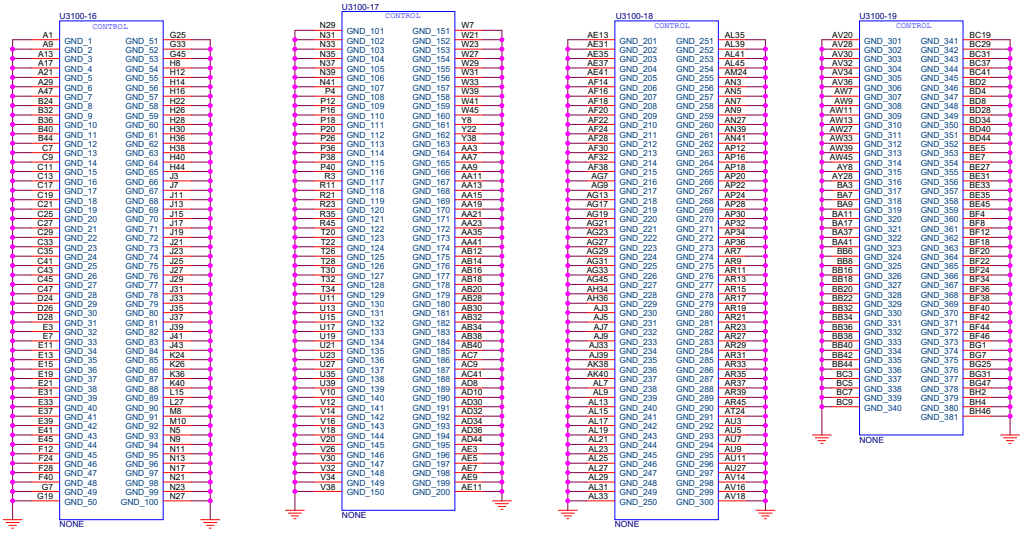

Title	_MAIMAIN		
Size A3	Document Number SDM855 GND		
Date:	Wednesday, August 16, 2023	Sheet 42	81

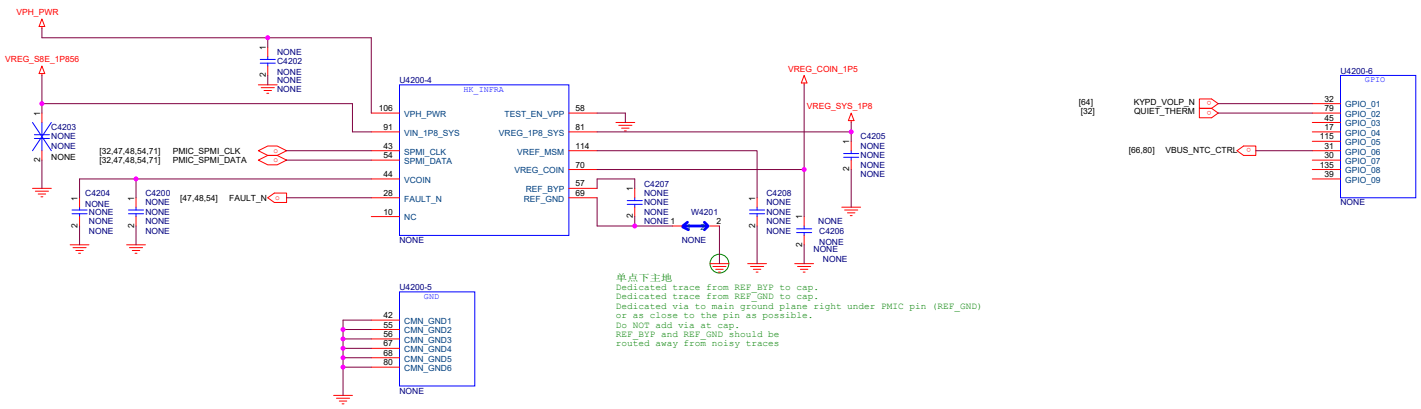

Title	_MAIMAIN
Size A3	Document Number PM855 XO&CTRL
Date: Wednesday, August 16, 2023	Sheet 43 81

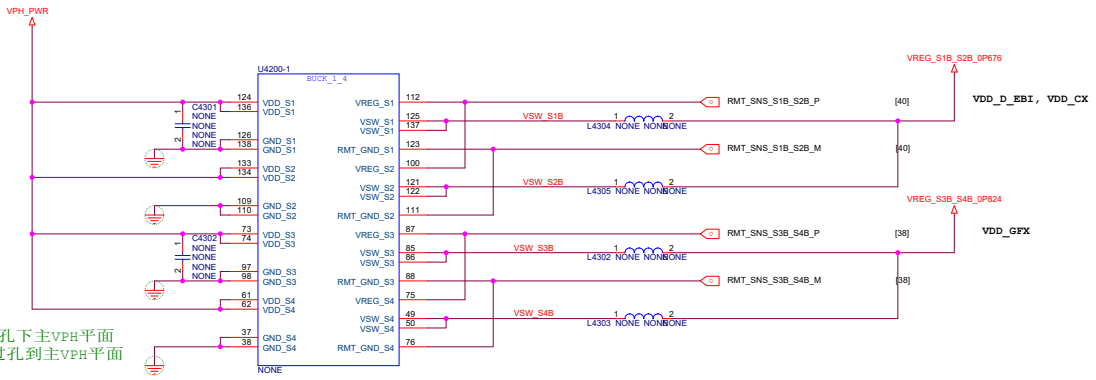

VDD_Sx pin 单个过孔下主VPH平面
buck输入电容两个过孔到主VPH平面

GND_Sx pin下主地

Title	_MAIMAIN
Size A3	Document Number PM855 BUCK CONVERTER1
Date: Wednesday, August 16, 2023	Sheet 44 of 81

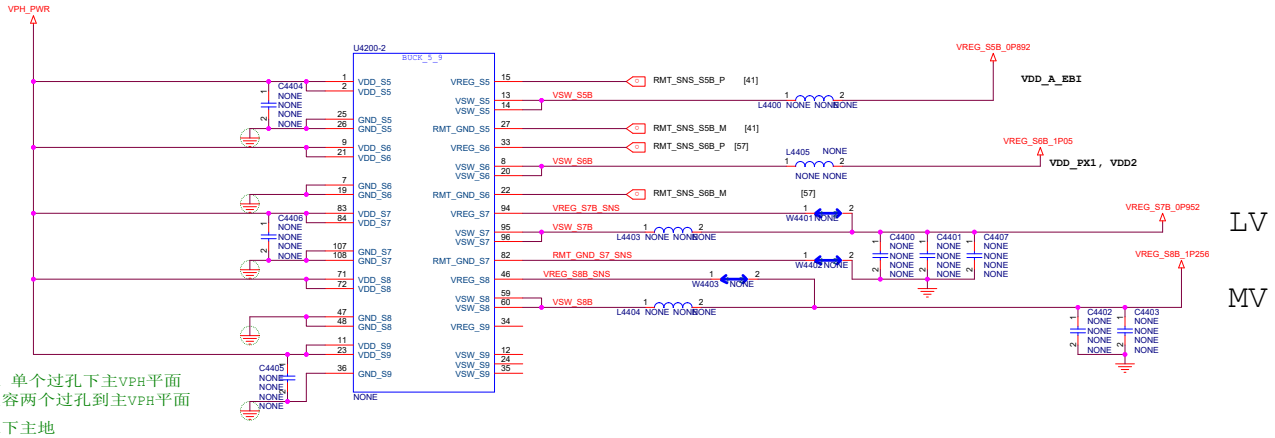

VDD_Sx pin 单个过孔下主VPH平面
buck输入电容两个过孔到主VPH平面

GND_Sx pin下主地

Title	_MAIMAIN
Size A3	Document Number PM855 BUCK CONVERTER2
Date: Wednesday, August 16, 2023	Sheet 45 81

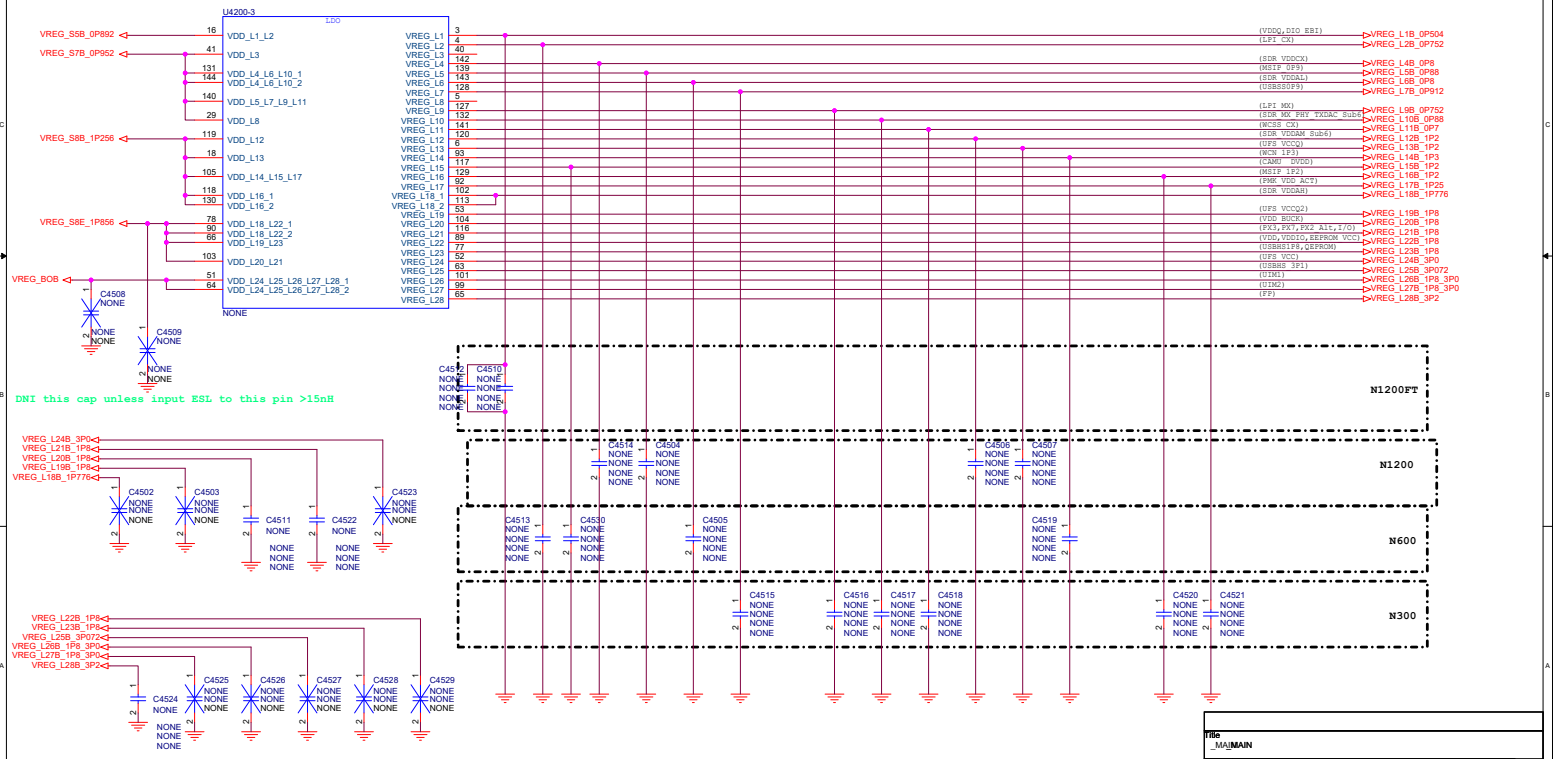

Title	_MAIMAIN
Size A3	Document Number PM855 LDOs
Date: Wednesday, August 16, 2023	Sheet 46 of 81

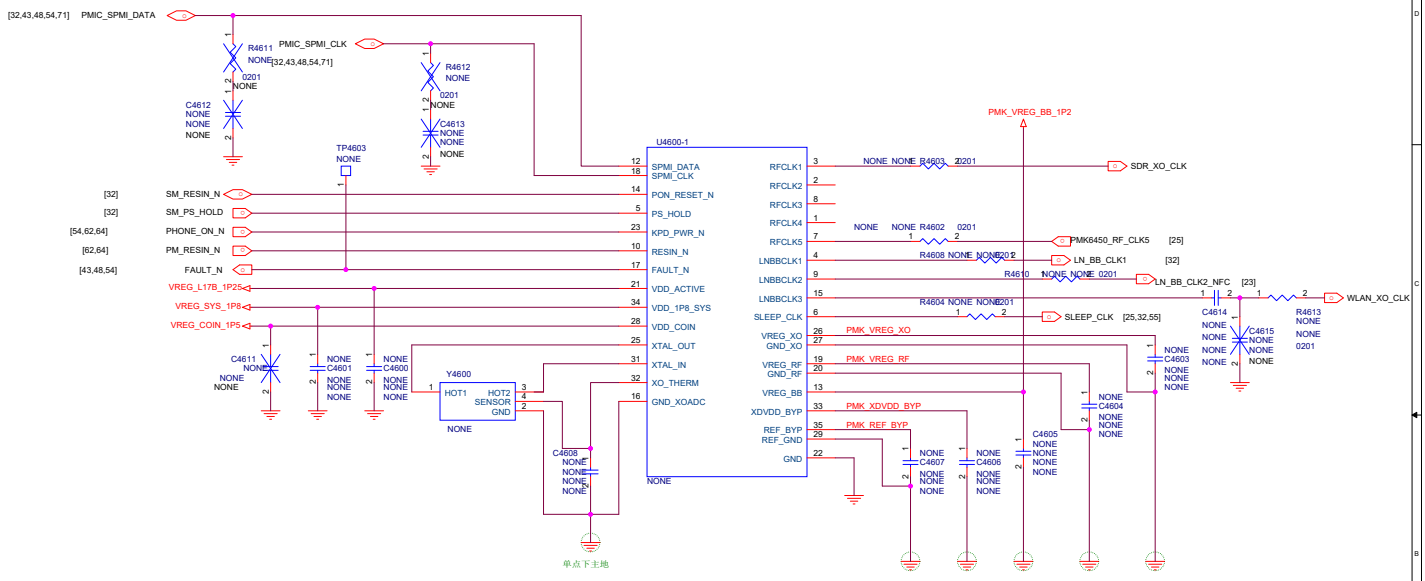

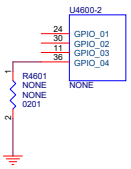

Table 3-30 Option pin state (PMK6450)

Options	Resistor values (Ω) [1]	LPDDR options	UFS option	SD card option
1	3240	LPDDR5	UFS2.2	SD card LDO enabled
2	10200	LPDDR5	UFS2.2	Skip SD card LDO enable
3 and 4 (Reserved)	–	–	–	–
5	39200	LPDDR5	UFS3.1	SD card LDO enabled
6	52300	LPDDR5	UFS3.1	Skip SD card LDO enable
7 and 8 (Reserved)	–	–	–	–
9	113000	LPDDR4X	UFS2.2	SD card LDO enabled
10	147000	LPDDR4X	UFS2.2	Skip SD card LDO enable
11 and 12 (Reserved)	–	–	–	–
13	357000	LPDDR4X	UFS3.1	SD card LDO enabled
14	536000	LPDDR4X	UFS3.1	Skip SD card LDO enable
15 and 16 (Reserved)	–	–	–	–

1. Resistor tolerance must be 1%.

Qualcomm
Confidential and Proprietary – Qualcomm Technologies, Inc.
May contain trade secrets
2022-12-29 03:25:18 GMT
nanjian5@nanjian-linux-mint-laptop

Title	_MAIN MAIN
Size A3	Document Number PM855 GPIO&GND
Date: Wednesday, August 16, 2023	Sheet

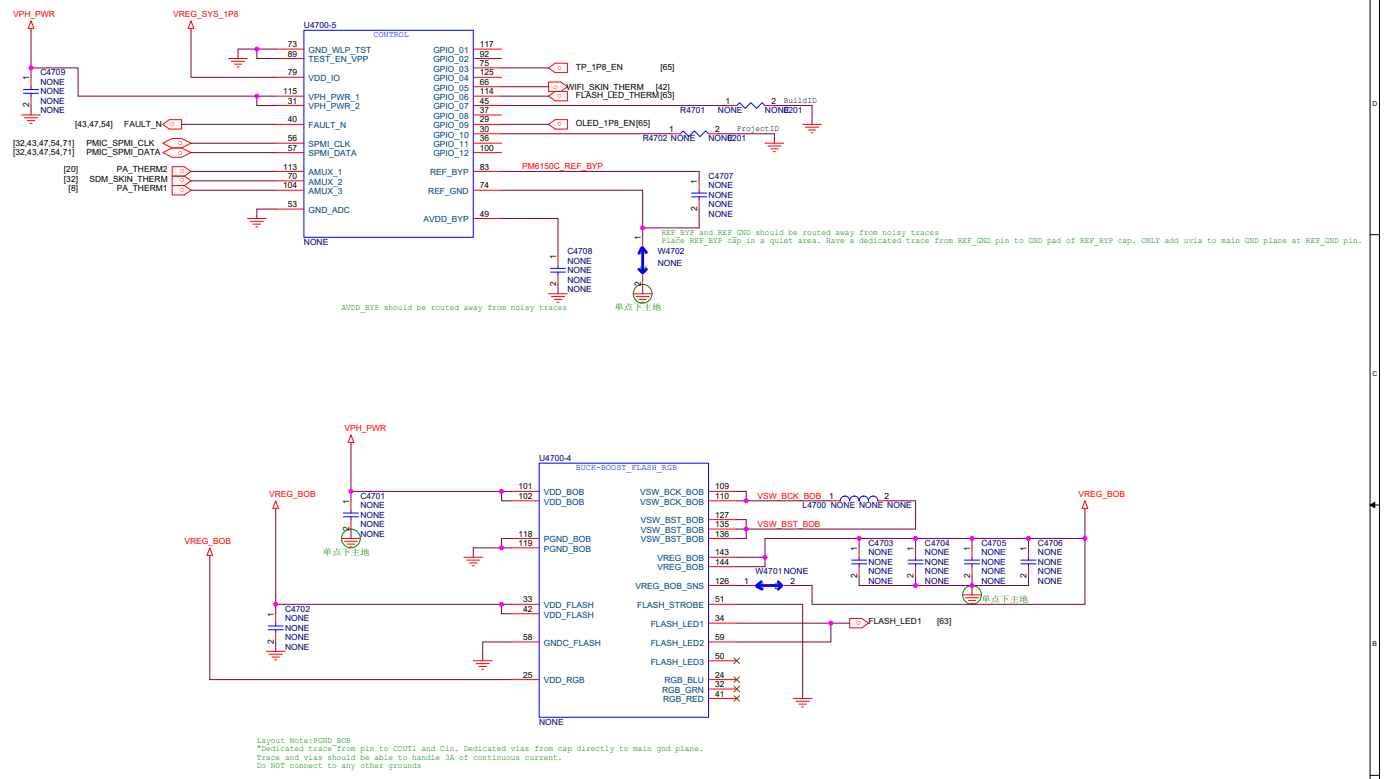

Title	_MAIMAIN
Size A3	Document Number PM855A CTRL&GND
Date: Wednesday, August 16, 2023	Sheet 48 81

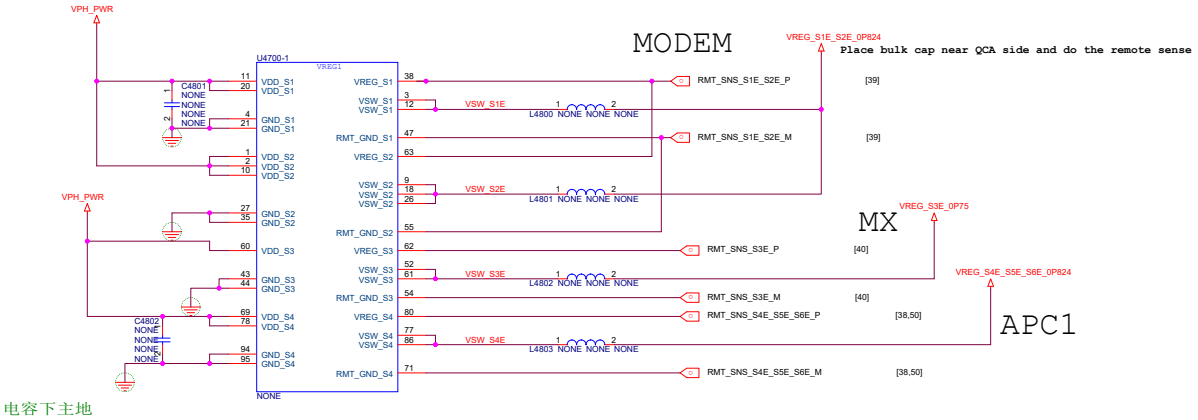

Title	_MAIMAIN
Size A3	Document Number PM855A BUCK CONVERTER1
Date: Wednesday, August 16, 2023	Sheet

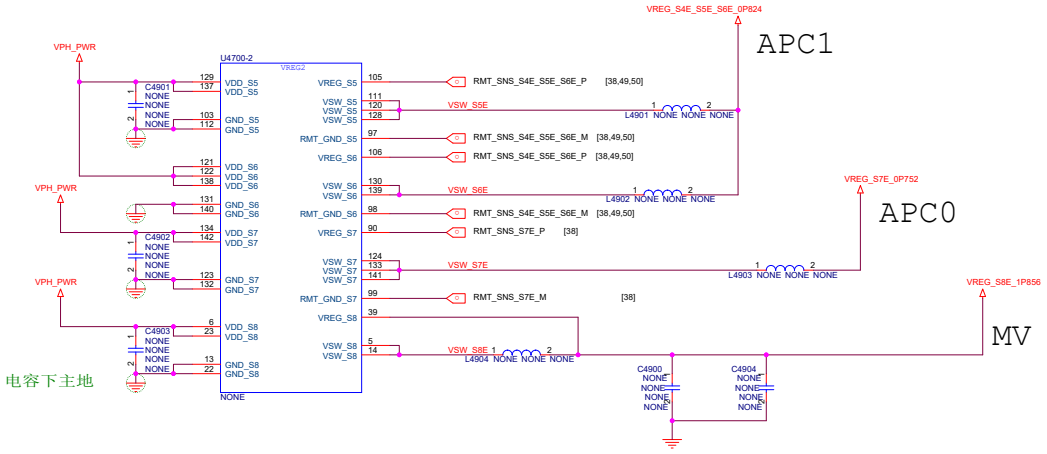

Title	_MAIMAIN
Size A3	Document Number PM855A BUCK CONVERTER2
Date: Wednesday, August 16, 2023	Sheet 50 of 81

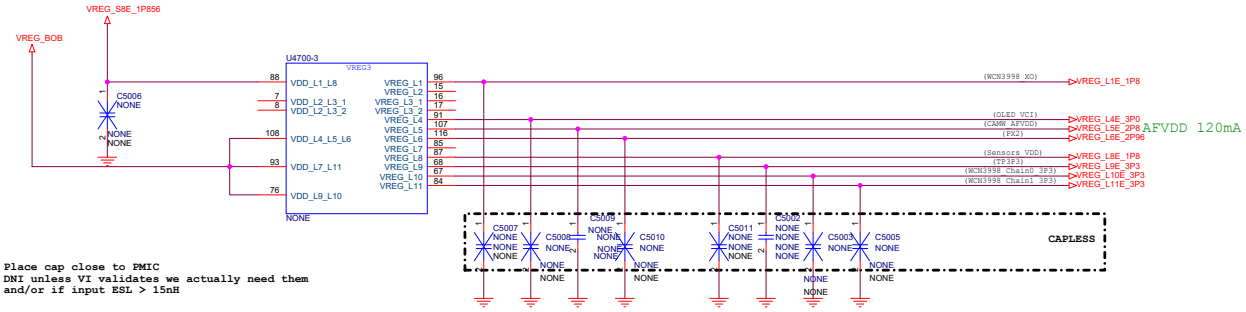

Place cap close to PMIC
DNI unless VI validates we actually need them
and/or if input ESL > 15nH

Note:For CAPLESS LDOs If decaps on the load side do not add up to LDO spec, then place the cap close to the PMIC

Title	_MAIMAIN
Size A3	Document Number PM855A LDOs
Date: Wednesday, August 16, 2023	Sheet

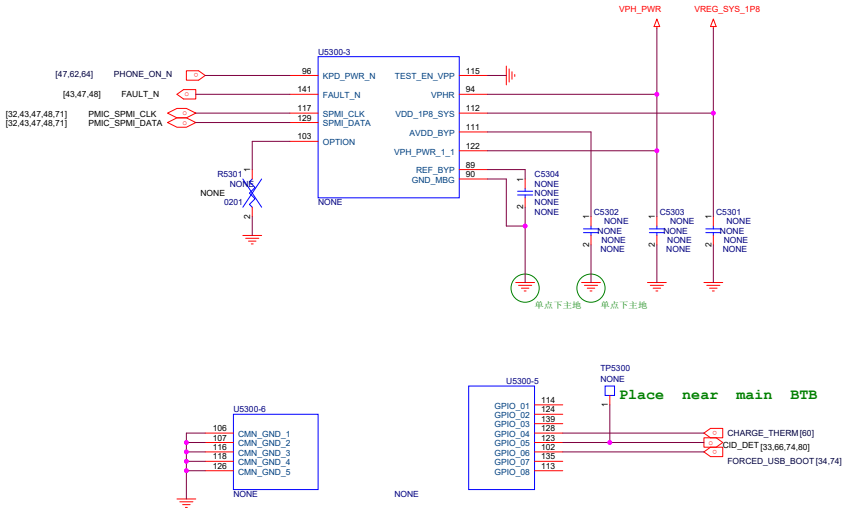

Title	_MAIN\MAIN
Size A3	Document Number PM8350B CTRL&GND
Date: Wednesday, August 16, 2023	Sheet 54 81

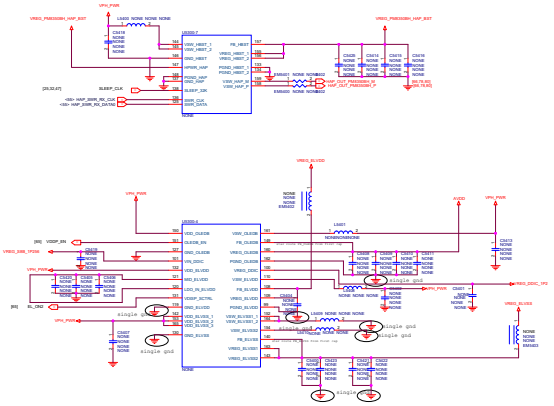

VRN3_BLVDD
VPN_PWR
AVDD
VPN_PWR
NONE
NONE
NONE
ERM402
U3300-6
VDD_CLKSW
CLKSW_EN
GND_CLKSW
VN_DDIC
VDD_BLVDD
GND_BLVDD
CC_IN_BLVDD
SSPI_SCTRL
GND_BLVDD
VDD_BLVDD_1
VDD_BLVDD_2
GND_BLVDD
VSW_CLKSW
PB_CLKSW
VRN3_CLKSW
PGND_CLKSW
VRN3_DDIC
VSW_BLVDD
PB_BLVDD
VRN3_BLVDD
PGND_BLVDD
VSW_BLVDD_1
VSW_BLVDD_2
VSW_BLVDD
PB_BLVDD
VRN3_BLVDD
NONE
L3401
NONE NONE NONE
NONE
NONE

PM8350B---1S BATTERY ,low voltage VIBRATOR DRIVER
PM8350BH---1S BATTERY ,high voltage VIBRATOR DRIVER
PM8350BHS---2S BATTERY ,high voltage VIBRATOR DRIVER

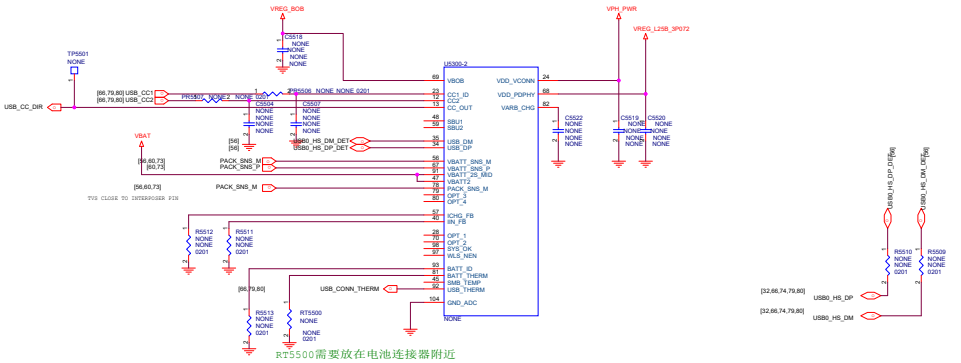

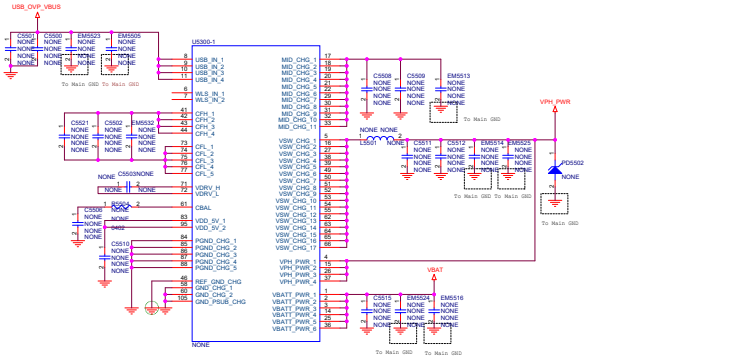

Title	MAIN
Size A2	Document Number PM8350B Charger
Date: Wednesday, August 16, 2023	Sheet 56 of 81

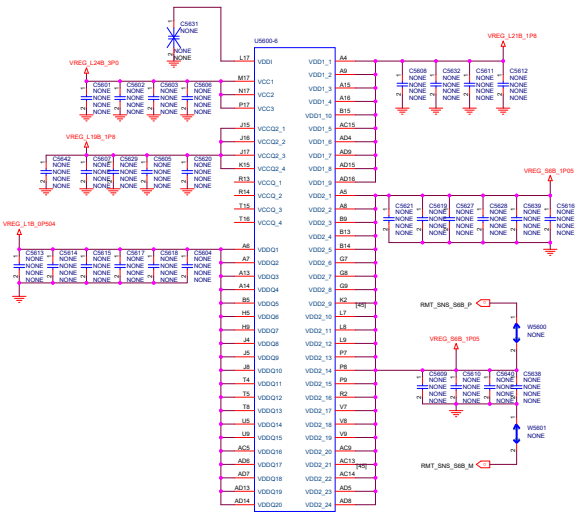

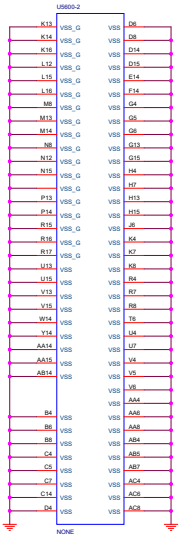

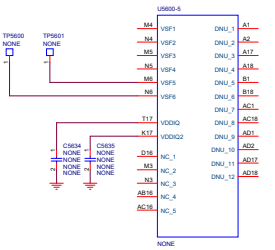

Title	_MAIN\MAIN
Size: A2	Document Number: MEMORY
Date: Wednesday, August 16, 2023	

UFS 2.2

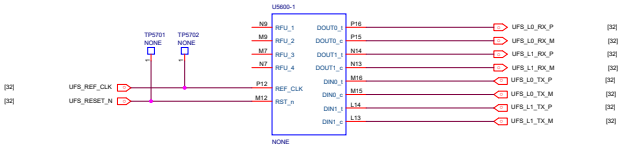

LPDDR4/4x

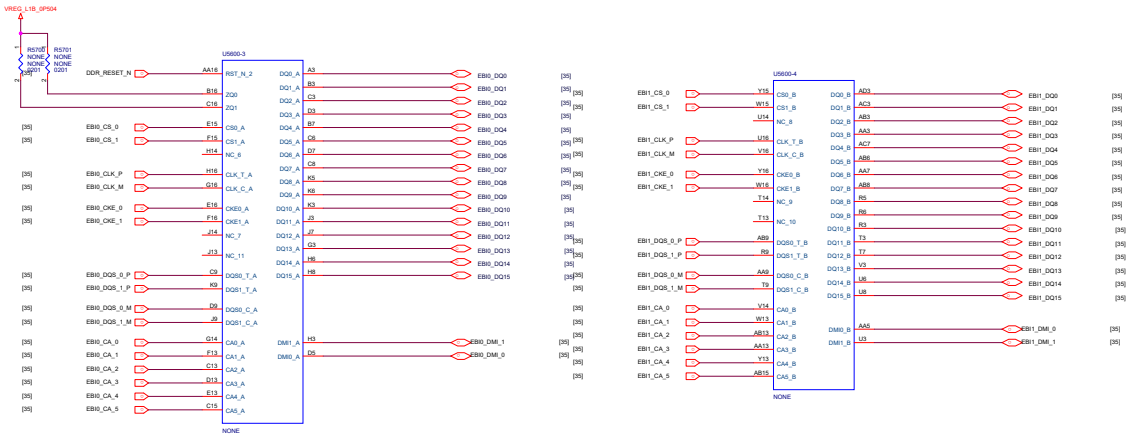

Title	_MAIN
Size A2	Document Number MEMORY UFS/LPDDR4X
Date: Wednesday, August 16, 2023	Sheet 58 of 81

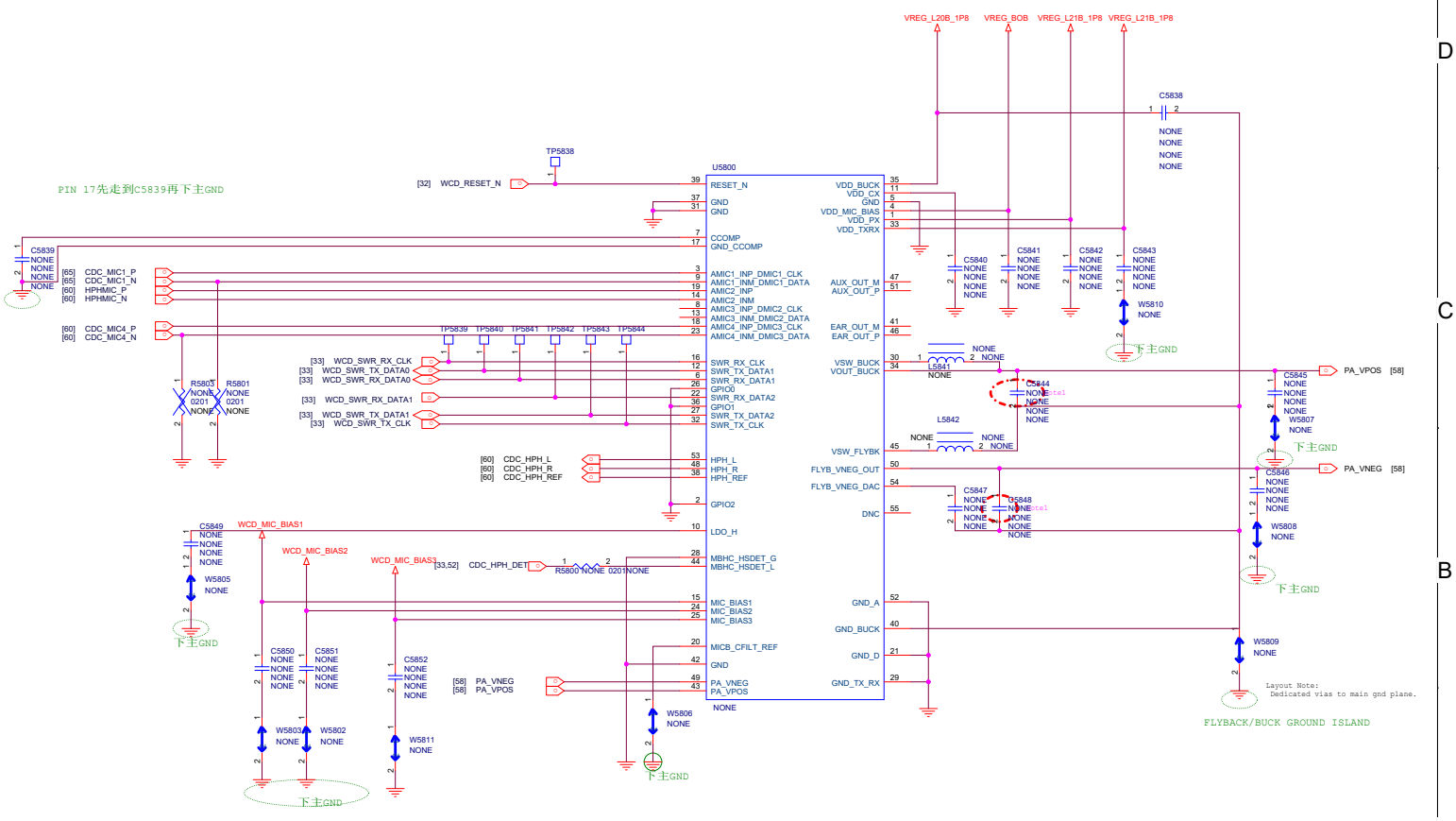

Title	<Title>		
Size A3	Document Number <Doc>		Rev <RevCode>
Date: Wednesday, August 16, 2023	Sheet 58 of 1		

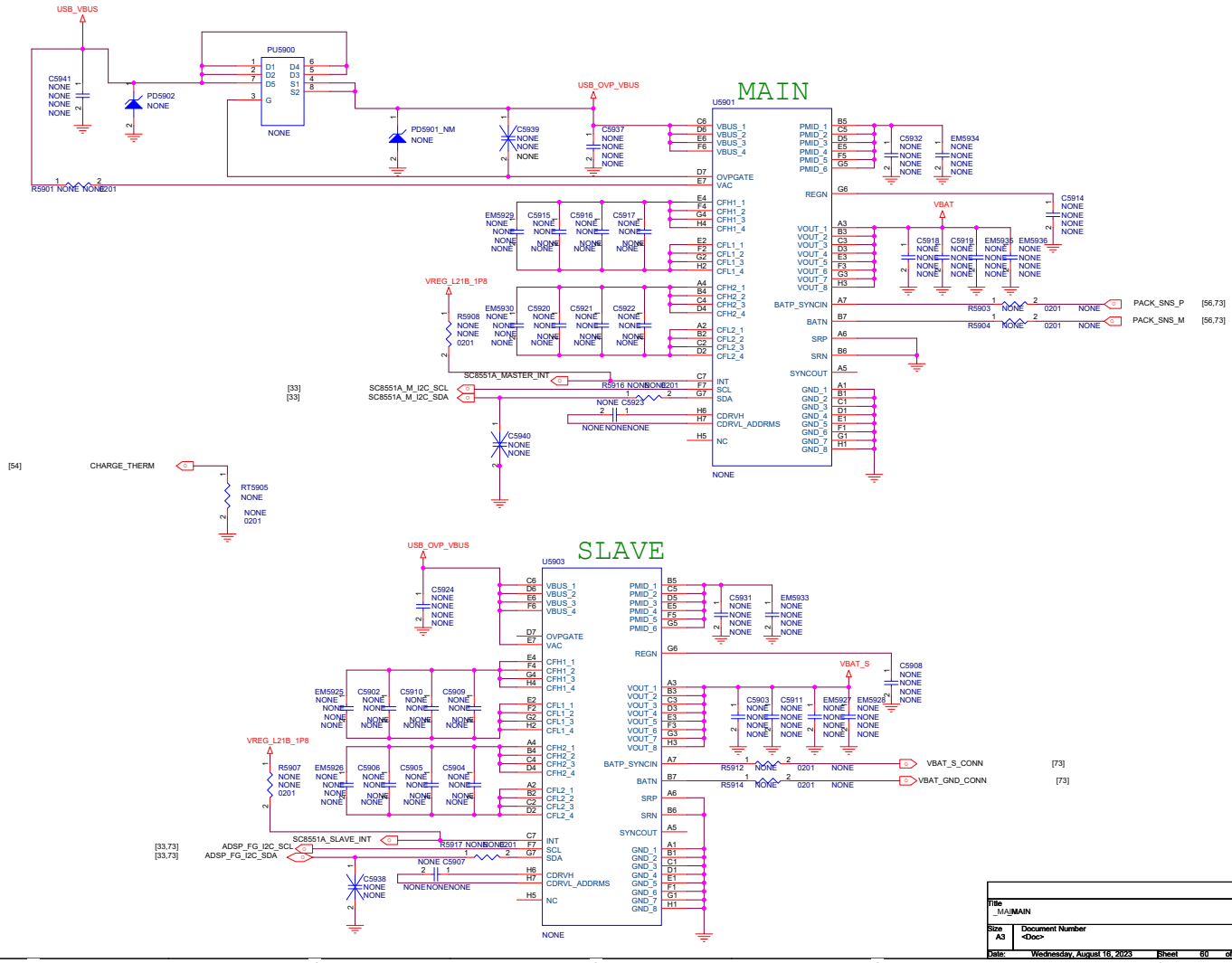

Title	_MAIMAIN
Size	A3
Document Number	<Doc>
Rev	P0
Date:	Wednesday, August 16, 2023
Sheet	60 of 81

SPK

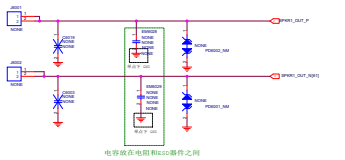

Second MIC

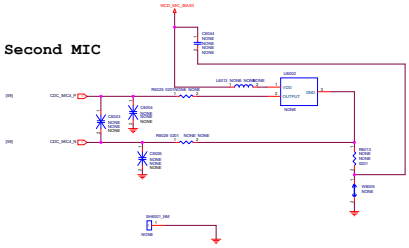

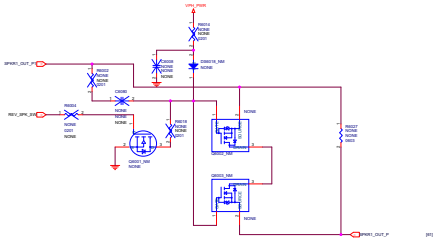

SPK

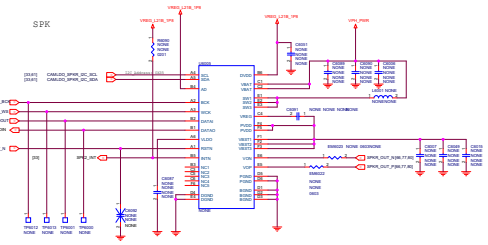

RCV+SPK

SPKR PA

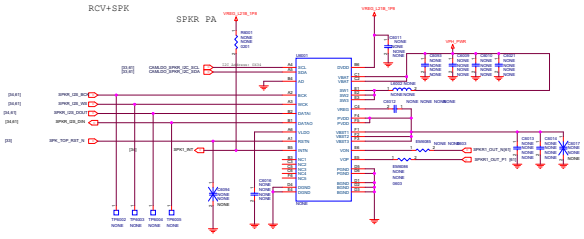

HEADSET

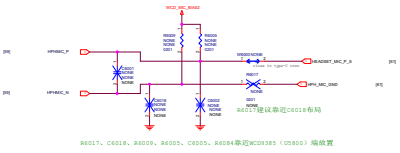

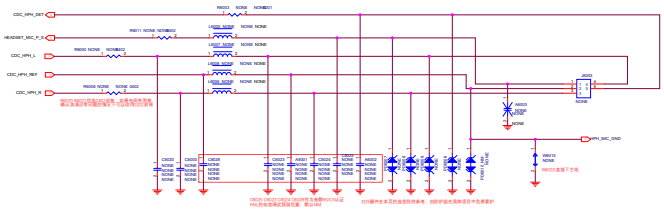

COMPASS

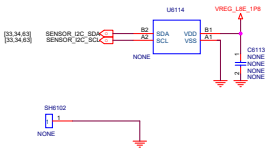

A+G

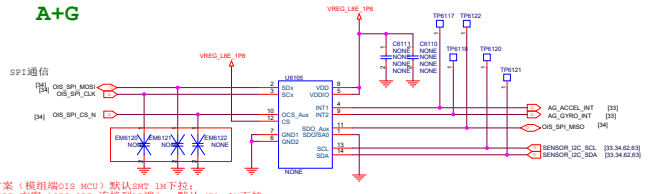

1. 如果使用硬件OIS方案（模组端OIS MCU）默认SMT 1M下拉；
2. 如果使用软件OIS SPI 方案（OIS SPI 连接到AP端），默认 NM 1M下拉；

Title	_MAIN\MAIN
Size A2	Document Number SENSOR
Date: Wednesday, August 16, 2023	Sheet

FLASH CON

INFRARED

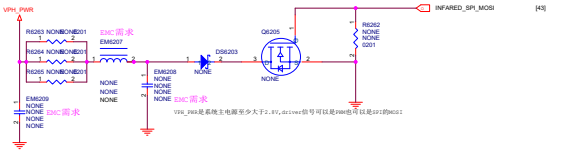

P_L-sensor

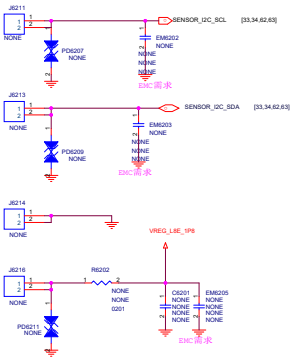

MI PHONE		
Title: _MAIN		
Size: A2	Document Number: SENSOR-2	Rev: P0
Date: Wednesday, August 16, 2023	Sheet 63 of 81	

Sidekey

音量键PCB 上要加丝印 V+ V-

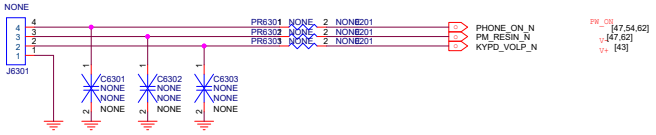

MI PHONE		
Title MAIMAIN		
Size A3	Document Number SIM CONNECTOR	Rev P0
Date:	Sheet 64 of 81	

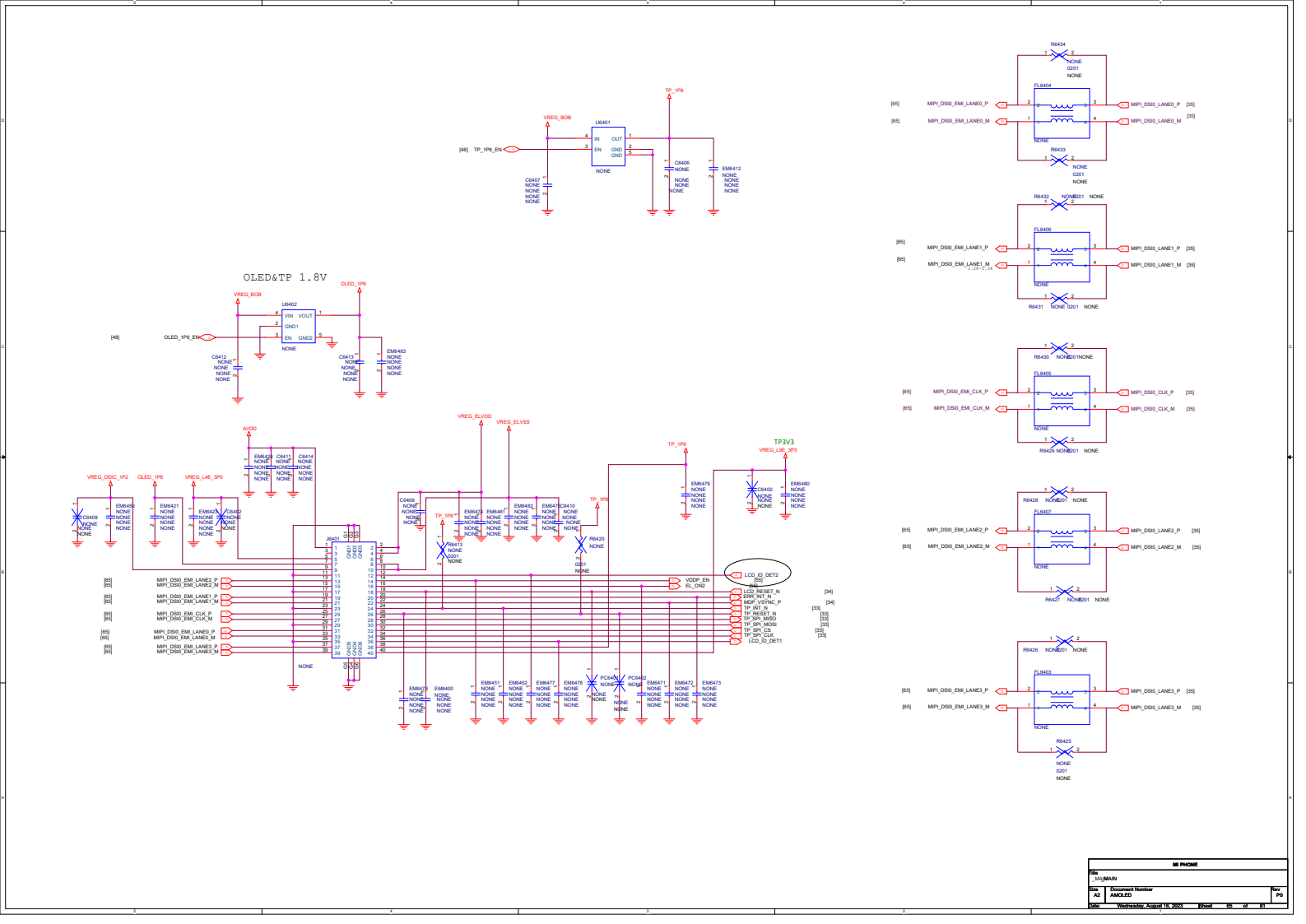

MI PHONE			
Title	_MAIN		
Size	Document Number		Rev
A2	AMOLED		P0
Date:	Wednesday, August 16, 2023	Sheet 65 of 81	

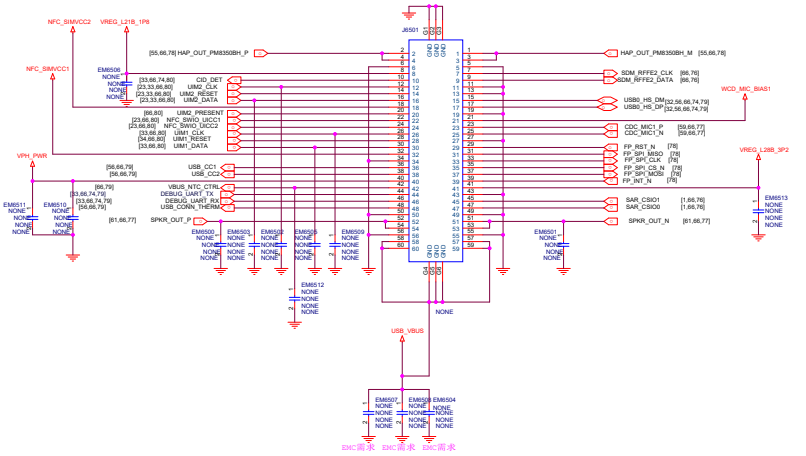

Title	MAIN
Size	A2
Document Number	MAIN_BTB
Date:	Wednesday, August 16, 2023
Sheet	66 of 81

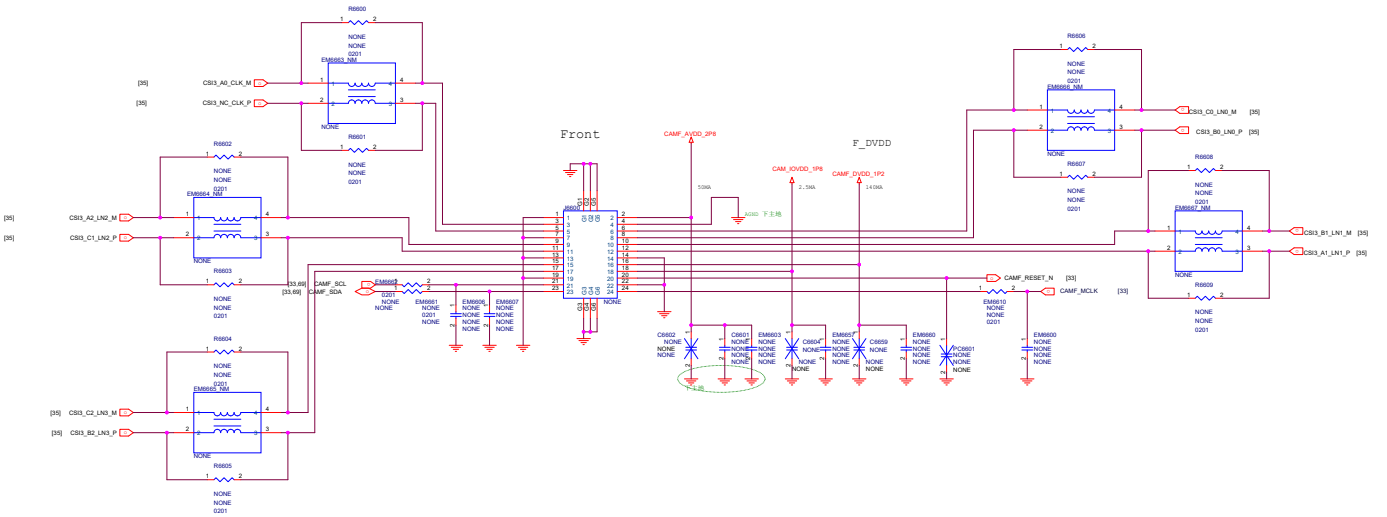

Title	_MAINMAIN
Size	A2
Document Number	Reserved(Analog FM)
Date:	Wednesday, August 16, 2023

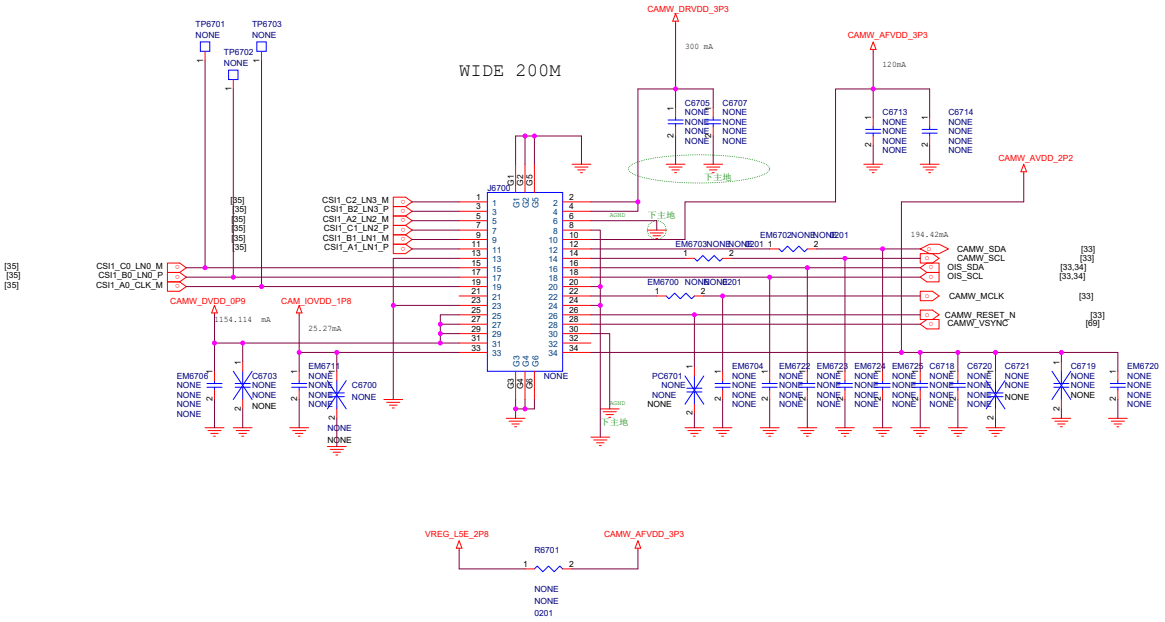

Title	_MAIN MAIN MAIN
Size A3	Document Number WIDE&TELE CAMERA
Date: Wednesday, August 16, 2023	Sheet 68 of 81

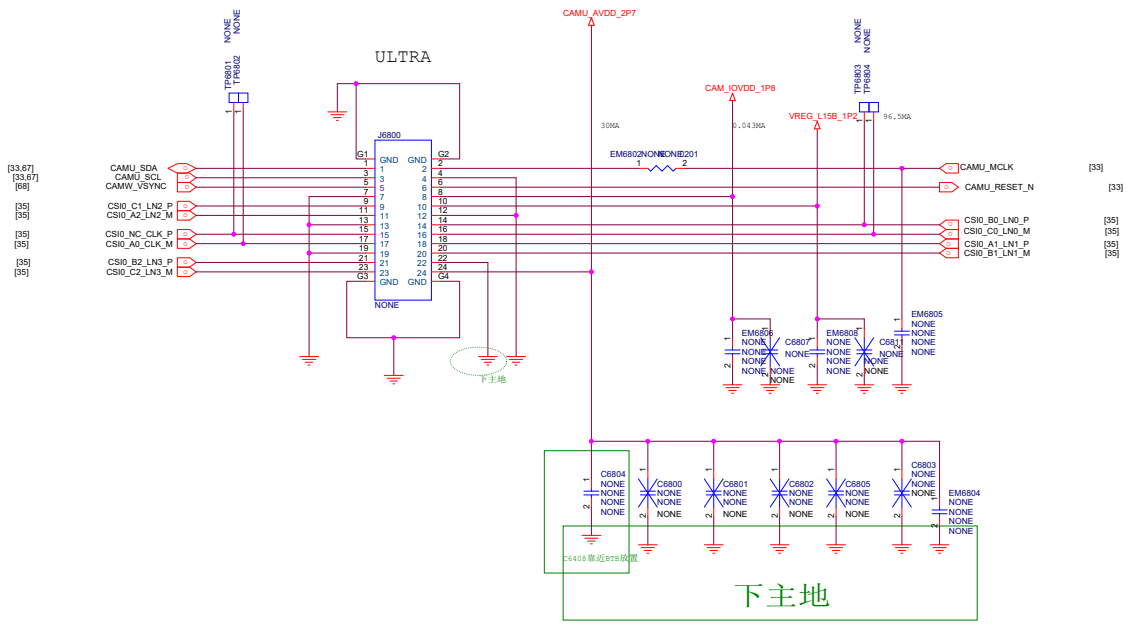

Title	_MAIN MAIN
Size A3	Document Number ULTRA CAMERA
Date: Wednesday, August 16, 2023	Sheet

2M MACRO

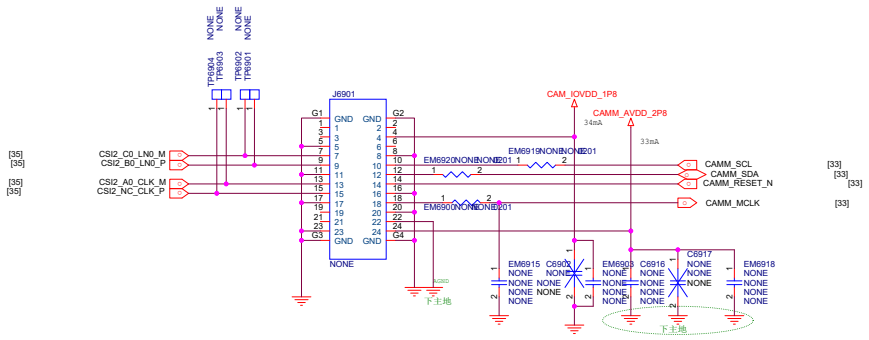

Title	_MAINMAINMAIN
Size	A3
Document Number	ULTRA CAMERA
Date:	Wednesday, August 16, 2023
Sheet	70 81

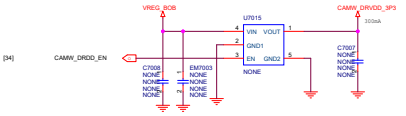

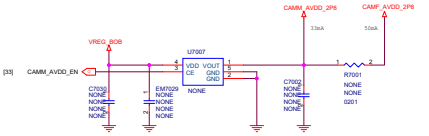

Vout=0.5V*(1+R7004/R7005)

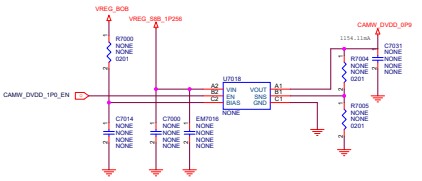

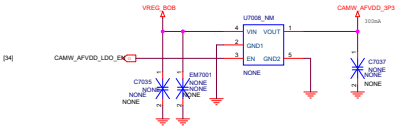

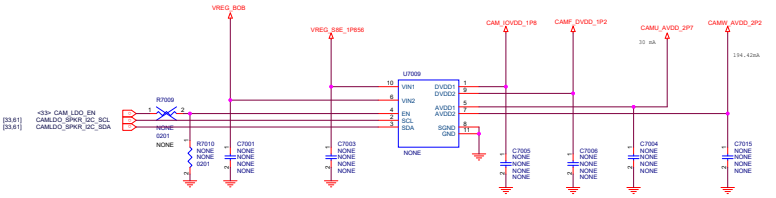

Title	_MAIN MAIN
Size A2	Document Number TEST POINT
Date: Wednesday, August 16, 2023	Sheet 71 of 81

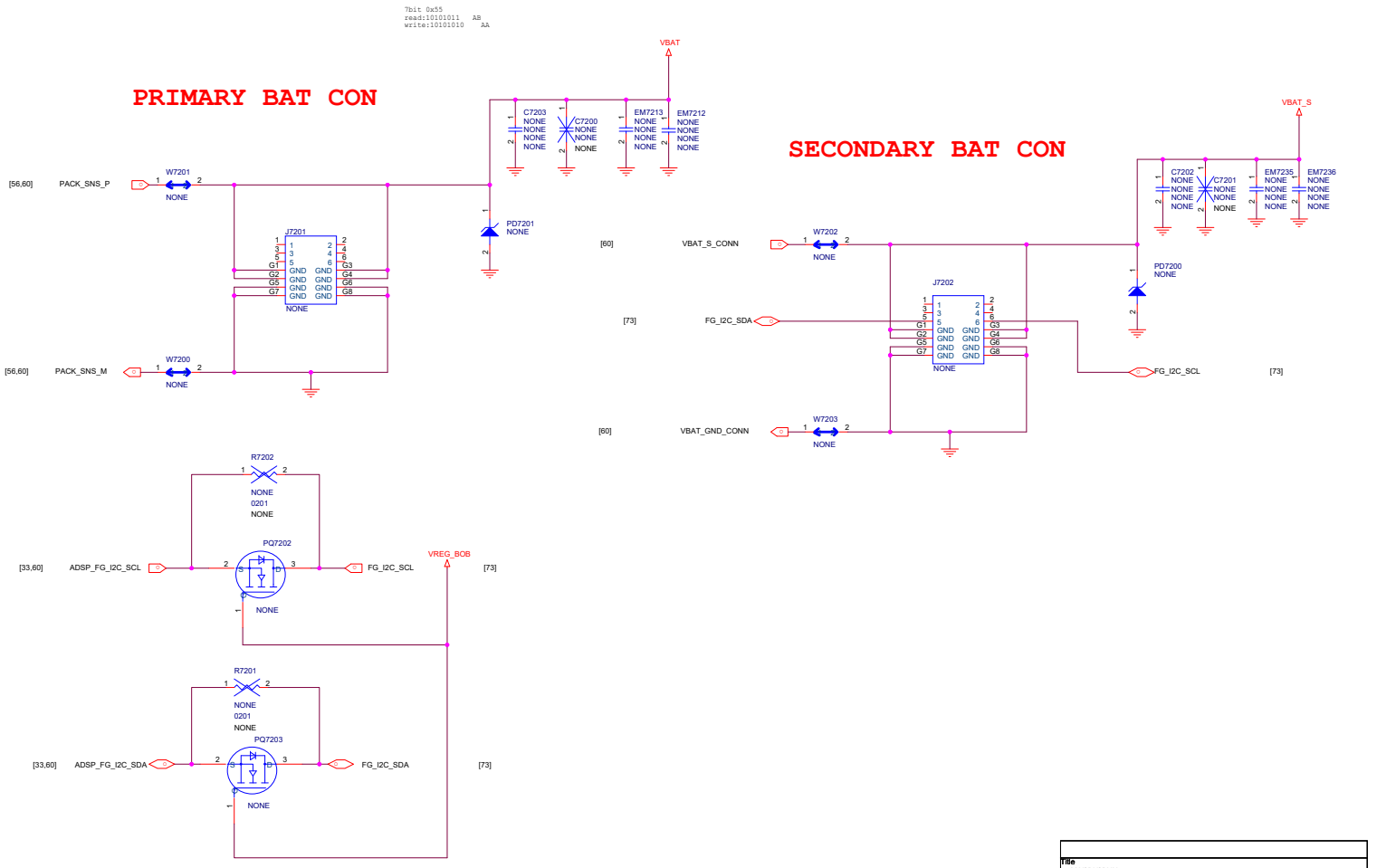

Title	_MAINMAINMAIN
Size A3	Document Number BAT
Date: Wednesday, August 16, 2023	Sheet 73 81

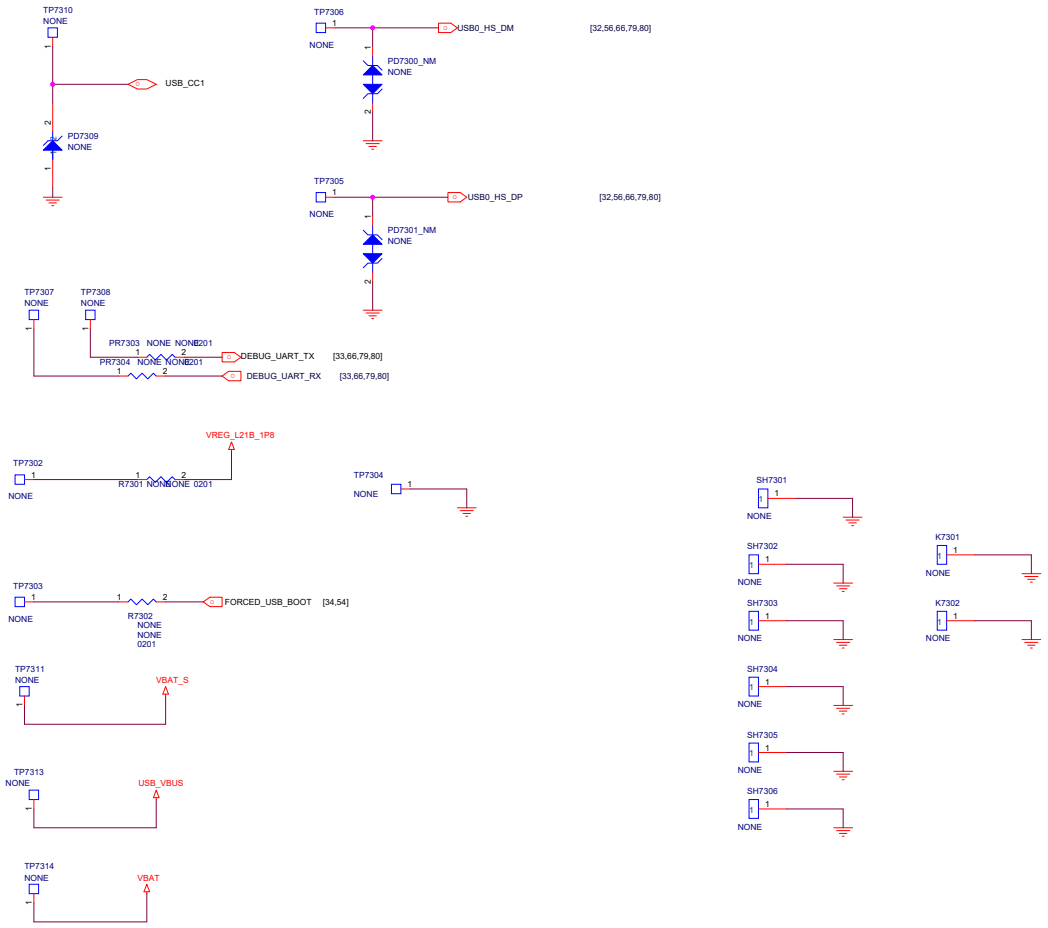

Title	_MAIMAIN
Size A3	Document Number PM8009
Date: Wednesday, August 16, 2023	Sheet 74

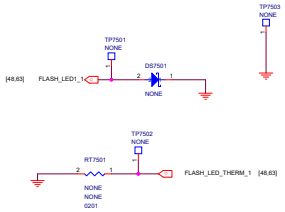

Title	<Title>	
Size A2	Document Number <Doc>	Rev <RevCode>
Date: Wednesday, August 16, 2023	Sheet 74 of 74	

ANT0_LMHB

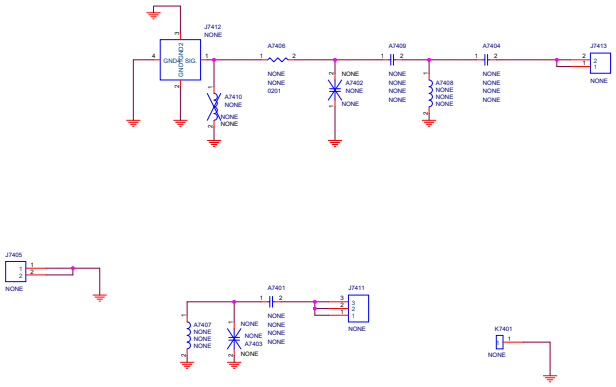

Title	MAIN	
Size A2	Document Number <Doc>	Rev <RevCode>
Date: Wednesday, August 16, 2023	Sheet 75 of 81	